Instructions for Use

lara

RIL-117 RIL-122

RIL-1 W&H Med - ENG - Rev08

Table of contents

Conformity 5
Symbols and messages 6
Introduction 9
About this manual 9
Use restrictions 10
Safety information 11
Safety warnings 11
Responsibility 15
Getting started 16
Unpacking 16
Handling 18
Product description 20
Installing the device 25
Operating the device 27
User interface menu 28
Device setup 34
ioDent 36
User authentication (optional) 36
USB pen drive 37
Standby mode 37
Administrator 38
User management (optional) 38
Traceability options (optional) 39
Managing printers 40
Printer selection (optional) 40
Label printer selection (optional) 40
Label printer usage (optional) 41
Label content description 43
Device tests 44
Device performance tests 44
Bowie and Dick test 45
Helix Test 48
Vacuum Test 51
Sterilization cycles 53
Load maintenance and preparation 53
Prepare the sterilizer 55
Sterilization cycle description 55
Sterilization cycle management 56
Unloading 59
Sterilization cycle report 59
Maintenance 64
Warnings for maintenance operations 64
Ordinary maintenance 65
50-cycle or monthly maintenance 67
400-cycle maintenance 73
800-cycle or biannual maintenance 76

800-cycle maintenance 83
4000-cycle or five-year maintenance 85
Extraordinary maintenance 86
Disposal 87
Diagnostics 88
Errors 88
Troubleshooting 93
Emergency door opening 101
Technical data 104
Sterilization cycles 104
Sterilization cycle phases 108
Technical data 111
Recommendations for validation 113
Diagrams 114
Water quality 115
Accessories, spare parts, consumables 116
Authorized W&H service partners 123
Documentation forms 124
W&H installation report 124
Helix Test documentation form 127

Conformity

CONFORMITY TO EUROPEAN REGULATIONS, STANDARDS AND DIRECTIVES

Sterilizer conforms with the following Regulations, Standards and Directives:

Standards and Directives	Description
CE 0051	Medical Device Regulation (MDR) / Regulation (UE) n. 2017/745 for medical devices. Class IIb devices, in accordance with the Rule 16 – ANNEX VIII of the above Regulation
CE	For Device in compliance with Machinery Directive (2006/42/EC), Low Voltage Directive (2014/35/EU) and Electomagnetic Compatibility Directive (2014/30/EU)
CE 0497 **2014/68/EU**	Pressure Equipment Directive (PED) / Directive 2014/68/EU (PED – Pressure Equipment Directive) for every sterilization chamber designed and manufactured in conformity to the ANNEX 1 and to the procedure described in the moduleD1 Annex III
2012/19/EU	Waste Electrical and Electronic Equipment Directive (WEEE)
EN 13060	Small steam sterilizers
IEC 61010-1	Safety requirements for electrical equipment for measurement, control and laboratory use, general requirements
IEC 61010-2-040	Safety requirements for electrical equipment for measurement, control and laboratory use; particular requirements for sterilizers and washer-disinfectors used to treat medical materials
IEC 61326-1	Electrical equipment for measurement, control and laboratory use - EMC requirements; general requirements
IEC 61770	Electric appliances connected to the water mains - Avoidance of backsiphonage and failure of hose-sets

Note: Lara sterilizers can be validated in accordance to EN ISO 17665.

Note: every new sterilizer is delivered with a Declaration of Conformity and a Warranty Card.

Symbols and messages

SAFETY SYMBOLS USED IN THIS MANUAL

WARNING: indicates a hazardous situation that, if not avoided, could result in death or serious injury.

Related to a sterilizer, these warnings indicate hazardous situations that could result in non-sterile conditions (e.g. non-sterile instruments) which could lead to fatal personal injury.

CAUTION: indicates a hazardous situation that, if not avoided, could result in minor or moderate injury.

SYMBOLS DISPLAYED ON THE PRODUCT

Hot surfaces!
Risk of burns.

Hot steam!
Risk of burns.

Consult the Instructions for Use for important cautionary information.

Do not use drinking water to fill the clean water tank; use distilled or demineralized water only.

Consult the Instructions for Use.

Disposal / Do not dispose of with normal waste.

PROPERTY DAMAGE MESSAGES

Notice: indicates information considered important, but not hazard-related. Typically to avoid damage to the product.

INFORMATION MESSAGES

Note: indicates additional information to facilitate use or understanding of the device.

STORAGE	Storage
TRANSPORTATION	Transportation
MD	Medical Device Only for MDR devices
SN	Serial Number
REF	Catalogue number
Max. P	Max. pressure / Max. allowable working pressure (MAWP)
	Temperature between XX °C and XX °C
	Manufacturing date (YYYY-MM-DD)
ITA	Country of manufacture

	Manufacturer
UDI	Unique Device Identification
HIBC	Health Industry Bar Code in accordance with HIBC Standard
SMALL STEAM STERILIZER	Small Steam Sterilizer
	This side up
	Fragile, handle with care
	Keep dry
	The sterilizer must be transported by two authorized technicians due to its heavy weight
	ON (supply) IEC 60417-5007

	OFF (supply) IEC 60417-5008
	IN-position of bistable push control IEC 60417-5268
	OUT- position of bistable push control IEC 60417-5269
	USB connection
GS1 Logistic	GS1 datamatrix for logistic purpose
#	Sterilizer type or model
TC	Test connection

Introduction

CONTENTS

This section deals with the following subjects:

About this manual 9
Use restrictions 10

About this manual

INTRODUCTION

This manual contains the Instructions for Use of the W&H sterilizers RIL-117 and RIL-122, hereinafter referred to as Lara 17 and Lara 22.

FOR YOUR SAFETY AND THE SAFETY OF YOUR PATIENTS

The purpose of this manual is to provide information about the devices to ensure:

- proper installation and set-up
- optimal use
- safe and reliable operation
- compliance with regular maintenance and servicing requirements

Please carefully read the safety information (see "Safety warnings" on page 11).

OBLIGATIONS WITH REGARD TO THIS MANUAL

This manual is an integral part of the product and accompanies it for its entire working life. It must be consulted in all situations related to the life cycle of the product, from its delivery through to decommissioning. For this reason, it should always be accessible to operators both online and offline.

Contact customer service in the event the manual is unavailable. If the device is transferred, always attach the manual for the new owner.

MANUAL CONTENT

This manual contains the Instructions for Use and for maintenance of the following device versions:

- RIL-117
- RIL-122

Versions differ only for the chamber volume.

DISCLAIMER

All pictures, graphics and illustrations provided in this manual are for the comprehension of the text. They are not meant to be an accurate representation of product details. Thus, they should be taken as indicative only, and may differ from the actual product.

For any suggestions or remarks please send an email to office.sterilization@wh.com.

COPYRIGHT NOTICE

Copyright ©, W&H Sterilization Srl.

All rights reserved in all countries.

All drawings, images and texts contained in this manual are the property of the manufacturer. Even partial duplication of drawings, images or text is prohibited.

The information contained in this document is subject to change without prior notice.

Use restrictions

INTENDED USE

For Medical Device in accordance with Regulation EU 2017/745:

The small steam sterilizers are intended for the sterilization of invasive and non-invasive medical devices. The devices are intended for professional use by trained people only.

For other purposes out of the scope of Regulation EU 2017/745:

The small steam sterilizers are intended for the sterilization of devices other than invasive and non-invasive medical ones. The small steam sterilizers are intended for the sterilization in veterinary practices. They are also intended to be used for materials and equipment which are likely to come into contact with blood or body fluids, e.g. implements used by beauty therapists, tattooists, body piercers and hairdressers.

The devices are intended for professional use by trained people only.

PROVIDED FEATURES

See "Sterilization cycles" on page 104 for the full list of key program features, including sterilization time, temperature and recommended load type.

USER QUALIFICATION

The users who may operate the sterilizer are the following.

User qualification	Competences
Head of the clinic/practice	Legally responsible for: ■ the efficiency of the hygiene protocol in place ■ the sterilization process ■ the operators' training and training documentation ■ the correct operation and maintenance of the equipment
Trained operators	■ Regularly attend the training for operating and using the sterilizer safely. ■ Use the sterilizer according to the Head of the clinic/practice's instructions.

Safety information

CONTENTS

This section deals with the following subjects:

Safety warnings 11
Responsibility 15

Safety warnings

THERMAL HAZARDS

- The chamber automatically begins to heat to high temperature as soon as the sterilizer is switched on – risk of burns!
- The trays and the sterilization load are hot at the end of each cycle. Use tray or cassette holders to empty the sterilization chamber.
- Always wear appropriate PPE during use of the device (e.g. gloves for cleaning, maintenance, etc...).

ELECTRICAL RISKS

- Do not pour water or any other liquids over the device (risk of electrical short circuits).
- Switch off the device and unplug the mains cable before inspecting, carrying out maintenance or servicing it.
- Ensure that the power receptacle the device is connected to is properly grounded.
- All electric devices connected to the product shall be of Insulation Class II (double insulated) or higher.
- Use only the mains cable provided by the manufacturer.

IMPROPER USE OF THE DEVICE

- The device must not be used in presence of explosive or flammable gases, vapors, liquids or solids.
- The device has not been designed for the sterilization of foodstuff or waste.
- Do not exceed the maximum load weight limits as specified in this manual (see "Sterilization cycle management" on page 56).
- Do not drink any water that has been inside the device.
- To prevent water leakage or damage, always close the water inlet tap before leaving the clinic for long periods or when no one is present. The manufacturer is not responsible for any damage caused if this instruction is not followed.

TAMPERING

- Do not remove the name plate or labels from the device.
- Repairs, maintenance or service must be carried out by authorized service providers always using genuine spare parts.

REQUIREMENTS

- Use only the mains cable set and accessories provided by the manufacturer.
- Serious incidents that have occurred in relation to this medical device should be reported to the manufacturer and competent authority in the country where the incident occurred.
- In case of malfunction of the device, contact an authorized technician or the manufacturer.

CYBERSECURITY

1) Device connectivity

The accessible external ports of the device are:

- Ethernet port, where present
  Intended use:
  - Network services (see description below)
- USB ports
  Intended use:
  - mass storage device, such as a pen drive, for cycle report saving;
  - mass storage device, such as a pen drive, for software update;
  - report printer
  - label printer
  - QR code reader (seen as a keyboard), for EliTrace functionality, where present;
  - Wi-Fi dongle key, for network services (see description below);
  - USB to Ethernet adapter for network services (see description below).

Network services are:

- remote data storage;
- label printer sharing;
- device user management;
- cloud communication for sending cycle data and device status and for software update.

Please note that the device functionality does not require connecting to the Internet.

Recommendation for cybersecurity

- All the listed ports and uses are available for both the device users and the service personnel, except for the software update that can be performed only by authorized personnel only (W&H partners or technicians).
- Update the device software to the latest version as recommended by the manufacturer.
- Use only trusted USB mass storage devices for report saving.
- Regularly backup the cycle reports to ensure to have a copy in case of cybersecurity events or incidents.

- Don't access the device web server functionality through links in e-mails.
- Ensure the mail service provider has a spam filter.

2) Device protective features for cybersecurity

The device is designed in such a way that a cyber attack or software failure does not compromise the safety in relation to the intended use. A successful cyber attack cannot result in direct patient harm: in fact, the device is not in contact with patients.

The device does not share any data (sensible and not sensible data) related to patients.

To further protect the device and minimize successful cyber attacks, the following precautions were taken:

- the access to the device operating system is not possible (user access to the operating system is disabled);
- a firewall is active on the device; all the device network connections (to and from the external world) are managed by the firewall which, following specific rules, filters them and blocks everything that is not strictly necessary for the device;

- the update/install operations are only possible using signed and encrypted software, provided by W&H;
- during the normal use, the operating system and the application (responsible for the device functionalities) are located in a read-only memory to avoid intentional corruption;
- all the cycle data are secured by means of checksum controls.

3) Cycle data storage

The device saves cycle data on the USB pen drive. Each file contains a control code that allows to check the file integrity.

4) Cloud secure communication

A secure communication (with authentication and authorization) can be established between the device and the cloud server for the following functionalities:

- remote software update;
- setting management;
- device monitoring;
- cycle data acquisition.

The user and authorized technicians can interact with the cloud server by means of a generic device (e.g.: PC, tablet, smartphone) with a web browser and proper authorization and authentication.

5) Infrastructure requirements

In order to minimize the possibility of cyber attacks, it is user responsibility to apply the following measures:

- software update/install shall be done by authorized and trained personnel only;
- it is recommended to activate a firewall on the router/modem used for the Internet connection.

Note: further security information is mentioned in the MDS2 document, which is available on request.

6) Software Bill of Material (SBOM)

The device provides the possibility to download the SBOM to the USB pen drive, by accessing the “System Info” menu page.

7) Events possibly caused by a cyberattack detectable by the user

The following situations, visible by the user, could by caused by cybersecurity events:

- frozen screen;
- black screen;
- significant slowdown when navigating the menus;
- malfunctioning or blocked network services (such as: remote data storage, label printer sharing, etc...).

8) Instructions for users on how to respond if a cybersecurity event or incident occurs

If a cybersecurity event or incident occurred, or in case of a suspect, the following indication shall be followed to minimize the impact and prevent further damage:

- to disconnect the device from the network (Ethernet cable and/or Wi-Fi dongle) to prevent spreading the damage to other devices;
- to disconnect the USB pen drive to reduce the possibility to corrupt stored data, like cycle reports;
- to inform the IT department and an authorized technician (or device manufacturer) and follow the indications they would provide to secure the affected device.

Responsibility

USER RESPONSIBILITY

- The user is responsible for the proper installation, the correct use and maintenance of the sterilizer in accordance with these Instructions for Use.
- The safety devices of the sterilizer are impaired when the product itself is not installed, used and serviced in accordance with these Instructions for Use.
- The Instructions for Use updated to the latest version is always available at med.wh.com.
- Keep these Instructions for Use for future reference.

MANUFACTURER RESPONSIBILITY

- The manufacturer can only accept responsibility for the safety, reliability and performance of the product when the product itself is installed, used and serviced in accordance with the Instructions for Use.
- Servicing by unauthorized persons invalidates all claims under warranty and any other claims.

Getting started

CONTENTS

This section deals with the following subjects:

Unpacking 16
Handling 18
Product description 20
Installing the device 25
Operating the device 27
User interface menu 28
Device setup 34
ioDent 36
User authentication (optional) 36
USB pen drive 37
Standby mode 37

Unpacking

UNPACK THE STERILIZER

CAUTION! Heavy product. The sterilizer must be removed from the box and transported by two authorized technicians.

Weight with box:

- Lara 17: 51 kg (112.4 lbs)
- Lara 22: 53 kg (116.9 lbs)

Weight without box:

- Lara 17: 44.5 kg (98.1 lbs)
- Lara 22: 46.5 kg (102.5 lbs)

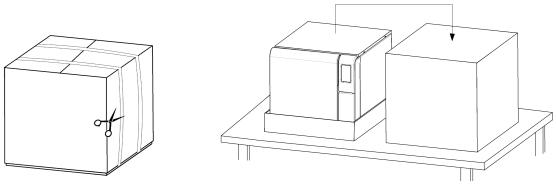

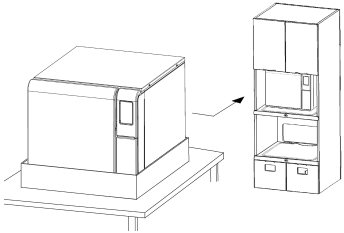

WARNINGS

Notice: check the external conditions of the box and the device. In case of any damage, immediately contact the dealer or shipping agent that has carried out the transport. Keep the packaging for shipping or transporting the device in the future.

Note: the packaging of the device is environmentally friendly and can be disposed of by industrial recycling companies.

CONTENTS OF THE PACKAGING

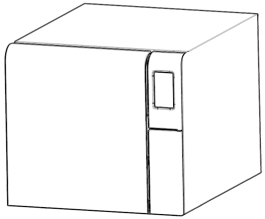

Sterilizer

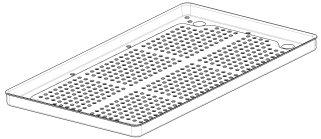

Trays (three)

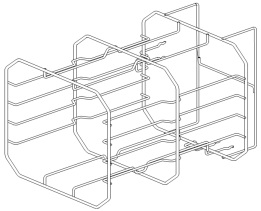

Reversible rack

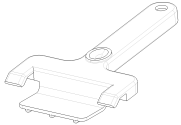

Tray holder

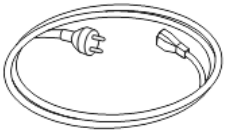

Mains cable

Drain tube

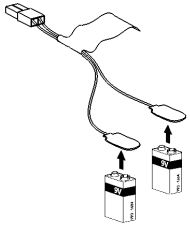

Emergency door opening tool

Tube for drain connection

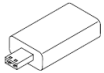

USB pen drive loaded with Instructions for Use

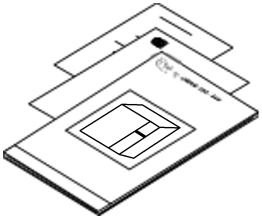

This manual, declaration of conformity, warranty card, work test report, maintenance sheet

ITEMS NOT PROVIDED WITH THE DEVICE

The following items are not provided:

- Water container to capture waste water during manual tank draining (volume larger than 5 l (1.3 gal)).
- LAN cable for connecting the device to a network (optional).

See "Accessories, spare parts, consumables" for a full list of optional accessories.

Handling

HOW TO RELOCATE THE DEVICE

Before transport:

- Completely drain both water tanks (see "Draining the used and clean water tank" on page 86).
- Allow the device chamber to cool down.

- Use original packaging when shipping or transporting the device. Replacement packaging materials are available from Service W&H.

Product description

FRONT VIEW

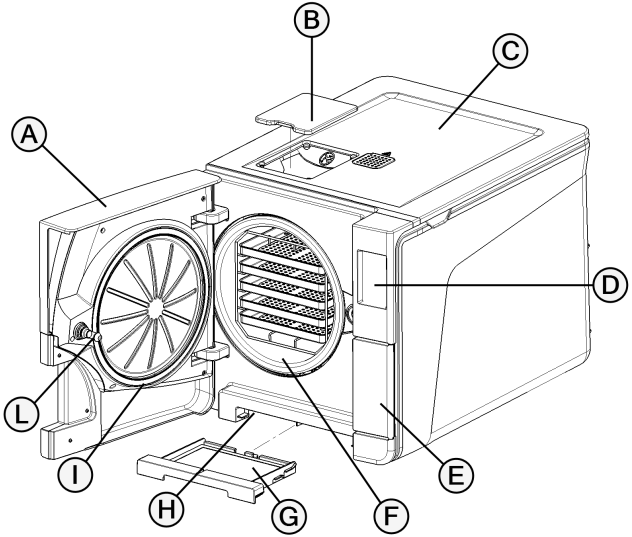

Part	Description
A	Chamber door
B	Water filling cover
C	Water tank cover
D	Touch screen
E	Service door
F	Sterilization chamber
G	Dust filter
H	Reset button of the safety thermostat
I	Door gasket
L	Door locking pin

UPPER INTERNAL STRUCTURE

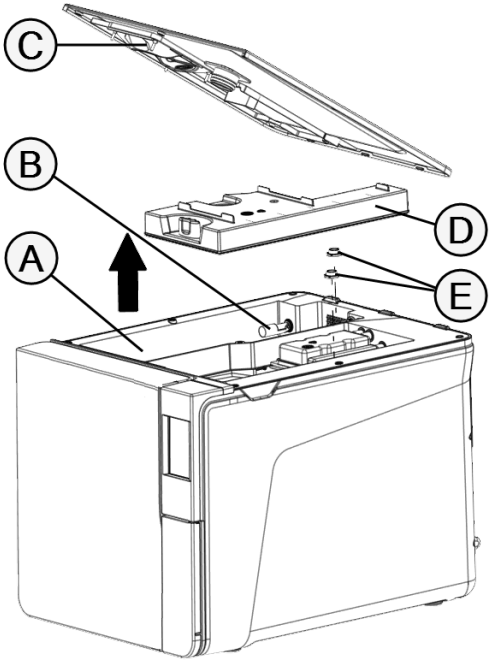

Part	Description
A	Clean water tank
B	Water level sensor
C	Water tank cover
D	Used water tank internal cover
E	Water tank filters

COMPONENTS BEHIND THE SERVICE DOOR

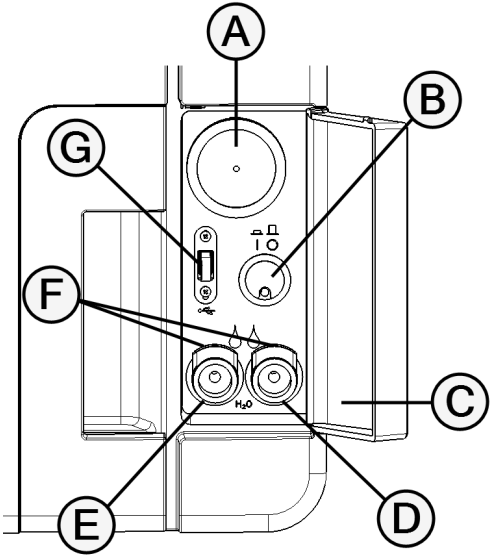

Part	Description
A	Bacteriological filter
B	Mains switch
C	Identification label
D	Used water drain connection (grey)
E	Clean water drain connection (blue)
F	Drain tube release button
G	USB port

REAR VIEW

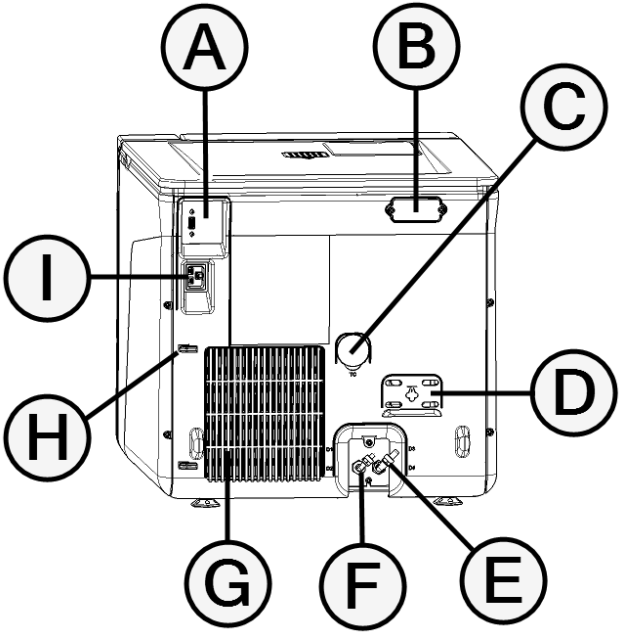

Part	Description
A	USB port
B	Air gap cover
C	Test connection
D	Pressure safety valve cover
E	Used water drain
F	Water supply inlet
G	Condenser grid
H	Mains cable guide
I	Mains cable plug socket

CHAMBER ACCESSORIES

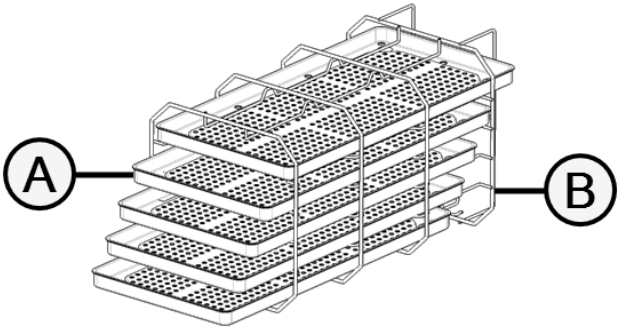

Part	Description
A	Tray
B	Chamber rack: ■ In the normal position, it can host 5 trays horizontally or 3 cassettes/containers vertically ■ In a 90° degrees rotated position, it can host 3 trays or 3 cassettes/containers horizontally

Installing the device

LOCATION REQUIREMENTS

Notice:

Do not place the device so that it is difficult to operate the controls behind the service door or to disconnect the mains cable.

Leave the condenser grid (rear side of the sterilizer) free from anything that might obstruct the air passage.

Surface materials should be water resistant. If sterilization cycles will be continuous, pay attention to the surrounding materials: steam can damage them.

The device must operate in absence of explosive atmospheres. The device must operate in a well ventilated room (indoor), far from sources of heat and from flammable materials.

Place the device on a flat and level surface.

Clearance requirements to ensure proper air circulation:

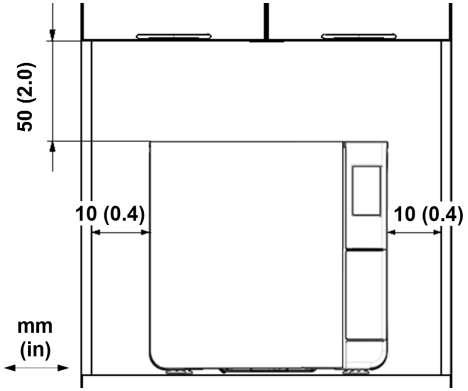

ELECTRICAL CONNECTIONS

All the cables and tubes connected on the rear side of the device must be placed far from the condenser grid (e.g. using the available guides).

Notice:

Use only the cord set provided by the manufacturer.

Ensure that external and internal surfaces are free from moisture or condensation before connecting to power.

The installation of the device shall be performed by two authorized technicians using PPE (Personal Protective Equipment) according to applicable standards.

The electrical power supply of the device must fulfill all applicable standards in the country of use, and must comply with the data label on the back of the device.

WATER CONNECTIONS

The device clean water tank can be filled manually by the user or automatically with a water supply system. The water supply system must deliver demineralized or distilled water meeting the specifications listed in this manual.

CAUTION! Do not install upstream water softeners or filters using oxidizing agents (e.g. chlorine), as they may compromise the water quality reducing device performance, and potentially causing damages.

Do not add any chemical/additive to the water.

The manufacturer's warranty is void if the sterilizer was used with water containing either chemical additives, or contaminant levels exceeding those listed in this manual. See "Feed water specifications (EN 13060)" on page 115.

Notice: the maintenance of the external water filling system must be done in exact accordance with the Instructions for Use given with the relevant system.

WI-FI CONNECTION

For the Wi-Fi connection proceed as follows:

1. Insert the Wi-Fi dongle key in the USB port.
2. Read the Instructions for Use provided with the Wi-Fi dongle key.

INSTALLING THE DEVICE

WARNING! In case of device malfunctions immediately unplug the device and call for service. Do not attempt to repair the device by yourself.

Notice:
Please ensure that all installation requirements are met before plugging the device. See "Connection diagrams" on page 114.
No other devices should be connected to the device power panel circuit.

1. Place the device on a sturdy, flat and level surface.

Note: if you need to move the device feet in backward position, install the safety bracket kit (X051125X) to comply with safety requirements (see the dedicated documentation).

2. Open the chamber door, remove all items from the sterilizer chamber except the chamber rack. Remove all plastic covers from trays.
3. Connect the auto-fill and auto-drain tubes in the rear of the sterilizer (optional).
4. Connect the Ethernet cable or the Wi-Fi dongle key in the rear of the sterilizer (optional).
5. Attach the mains cable to the socket in the rear of the sterilizer and route the cable through the cable guides.
6. Connect the mains cable to a wall outlet. For power supply requirements, see "Technical data" on page 111.

Operating the device

POWER THE STERILIZER ON/OFF

1 Press the power switch behind the service door: once switched ON, the visual indicator on the power switch turns green.

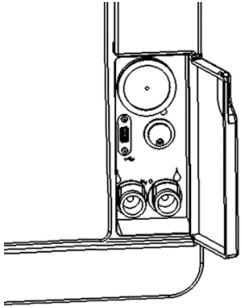

2 After a quick autotest the device automatically enters Standby mode. See "Standby mode" on page 37.

Note: at the first start-up of the device, the Guided Configuration procedure automatically appears; see "Device setup" on page 34.

3 Tap ⏻. The homepage appears with the enabled cycles.

HOMEPAGE DESCRIPTION

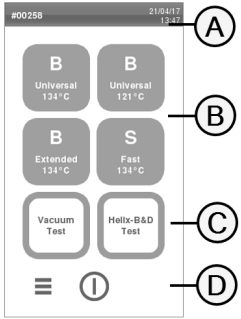

Part	Description
A	Title/purpose of the screen, or the cycle number and the current date and time.
B	Available cycles.
C	Available tests.
D	Additional buttons used to navigate the menu.

User interface menu

MAIN MENU FUNCTIONS

Note: this section describes the device functions. Please note that the availability of them depends on the device model and some of them might not be available for this model.

Icon	Label	Function
	Menu	Opens the menu.
	System Info	■ Shows the system information. ■ During a cycle, shows the cycle parameters.
	Device Settings	Opens the pages to sterilizer management.
	Traceability	Opens the pages to: ■ monitor the performed cycle data. ■ manage users. ■ set the label printing options.
	Accessories	Opens the pages to accessories management.
	Maintenance	Carries out the maintenance procedure.

SETTINGS MENU FUNCTIONS

Icon	Label	Function
	Device	Opens the pages to set the device.
	Language	Sets device language.
	Date & Time	Sets date and time format, current date and time and time zone.
	Sterilizer Name	Sets the sterilizer name.
	Energy Management	Changes the standby mode delay.
	Display	Sets the display brightness.
	Audio	Manages the sterilizer sounds.
	Cycle	Opens the pages to manage cycles.

Icon	Label	Function
	Cycle Exclusion	Sets the cycles menu.
	Measurement Units	Sets the unit of measure (temperature, water conductivity and pressure).
	Daily Cycle Program	Programs a sequence of cycles to be run on daily basis.
	Connectivity	Opens the pages to manage the network connection.
	Ethernet	Manages the Ethernet network.
	WI-FI	Allows wireless network selection and configuration.
	Network Status	Only with a network connection set. Provides information about the network status.
	IoDent	Only if this service is supported in the country of use, and if the sterilizer is connected to it. Shows the status of the connection with the W&H monitoring server.
	Akidata status	

Icon	Label	Function
	Remote Data Storage	Only with a network connection set. Opens the page to manage the remote storage.
	Settings	Only with a network connection set. Sets the parameters of the network location.
	Save all	Only with a network connection set. Copies all the files in the specified location in the network.
	Test	Only with a network connection set. Checks if the files can be copied to the specified location.
	USB options	Enables/disables USB warning messages.
	Traceability Settings	Chooses if the sterilizer is master or slave.

TRACEABILITY MENU FUNCTIONS

Icon	Label	Function
	Cycle History	Shows all the sterilization cycles and tests and prints reports and labels.
	Save	Saves all the sterilization cycle reports in the USB pen drive.

Icon	Label	Function
	User Management	Optional, activated with an activation code. Permits managing the users.
	Add User	Administrator only. Adds a user.
	Delete User	Administrator only. Deletes a user.
	Reset user PIN code	Administrator only. Resets a user PIN code.
	Change your PIN code	Changes the PIN code.
	Options	Optional, activated with an activation code. Administrator only. Permits the following: ■ Identifies and saves the operator who starts the cycle and releases the load. ■ Protects with a password the cycle start, the cycle stop and the load release.
	EliTrace	Allows to manage the instrument database.
	Label Printer	Optional, activated with an activation code. ■ Enables/disables the printing of the labels. ■ Sets the automatic or manual printing of the labels. ■ Sets the maximum storage time of the wrapped sterilized items.

ACCESSORIES MENU FUNCTIONS

Icon	Label	Function
	USB Pen Drive	Opens the formatting page of the USB pen drive.
	Format	Formats the USB pen drive.
	Label Printer	Optional, activated with an activation code. Permits to select the label printer and sets the printout layout.
	Local Printer	Selects a printer connected to the sterilizer.
	Shared Printer	Selects a printer connected to another sterilizer (connected via local network).
	Calibration	Adjusts the label printer to the edge of the label.
TEST	**Test**	Prints a test label.
	Printer	Selects the printer model connected to the sterilizer. The icon appears disabled if the printer/Ethernet cable/Wi-Fi dongle key is not connected.
	Special Codes	Saves the codes issued by the manufacturer to activate special functions. **Note**: only for technical support.

MAINTENANCE MENU FUNCTIONS

Icon	Label	Function
	Bact. Filter	■ Shows the status of the consumables. ■ Resets the cycle counter.
	Dust Filter	
	Door Gasket	
	Chamber Cleaning	■ Shows the status of the cleaning operations. ■ Resets the cycle counter.
	Tank Cleaning	
	4000 Cycle Service	Shows the number of cycles performed and left before the necessary maintenance.
	System Update	Installs and upload the software.

COMMON COMMANDS AND ICONS

Icon	Function
	Enters/exits the standby mode.
	Moves to the previous/next screen.
	Opens the homepage.
	Accesses to the sub-menus.
	Provides access to the setting screen of a specific area.
	Shows the list of all operating parameters of the sterilizer.
	Opens a screen with other settings/options.

Icon	Function
	Refreshes the page.
	Indicates the value that may be changed and appears by clicking on it.
	■ Confirms the active option. ■ Saves a setting or a parameter. ■ Answers YES to a question.
	■ Aborts the action/function. ■ Moves to the previous screen without confirming/making any changes nor saving any parameters. ■ Answers NO to a question.
	Indicates that the AUTO DRY mode is operating.
	Optional, activated with an activation code. Indicates that the ECO DRY plus mode is operating.
	Increases/decreases the value.

Icon	Function
	Indicates that an error occurs.
	Indicates that the option checked is working properly.
	■ Plays a video. ■ Starts a procedure.
	Pauses a video.
	Indicates that the chamber door is locked.
	Indicates that the chamber door is locking/unlocking.
	Indicates that the chamber door is unlocked and can be open.
	Indicates that the option is ON and allows to set it OFF by touching it.
	Indicates that the option is OFF and allows to set it ON by touching it.

Icon	Function
	Indicates that the option is active/not active.
	Indicates that the option is enabled/disabled.
	Indicates that the user is using the administrator credentials.
	Confirms the active option and saves a setting or a parameter.
	Copies the system info to the USB pen drive.
	Shows an animation about the replacement procedure.
	Shows a sterilization summary.

Device setup

GUIDED CONFIGURATION

At the first start-up of the device, the Guided Configuration procedure automatically appears; this procedure allows to set some parameters of the unit, such as:

- Language
- Network connection (where applicable)
- Time zone settings
- Date & time settings
- Device name

SET THE LANGUAGE

1. On the homepage, tap ≡ > ⚙ > ⚙ > 🗨.
2. Tap the language you prefer.
3. Tap ‹ to confirm and return to the homepage.

SET THE DATE AND TIME

To change the date and time format, current date and time and time zone:

1. On the homepage, tap ≡ > ⚙ > ⚙ > 📅.
2. Tap the value you want to change (format, time, date and/or time zone).
3. Tap the desired value.
4. Tap ‹ to confirm and return to the previous page.

SET THE DEVICE NAME

To change the device name that appears in the cycle reports:

1. On the homepage, tap ≡ > ⚙ > ⚙ > ID.
2. Tap the text box: a keyboard appears.
3. Enter the new device name.
4. Tap ✓ to confirm.
5. Tap ‹ to return to the previous page.

SET THE DISPLAY BRIGHTNESS

To change the display brightness:

1. On the homepage, tap ≡ > > > .
2. Tap or to change the value.
3. Tap < to confirm and return to the previous page.

SET THE MEASUREMENT UNITS

To change the measurement units:

1. On the homepage, tap ≡ > > .
2. Tap the measurement unit you prefer.
3. Tap < to confirm and return to the previous page.

CONNECT TO A NETWORK

If you connect through an Ethernet cable, in most cases the sterilizer will connect to the network automatically. If it does not connect automatically, or if you are using a Wi-Fi dongle key, follow the procedure below under supervision of your IT manager / network administrator.

1. On the homepage, tap ≡ > > .
2. If the connection is through the Ethernet cable, tap : the TCP/IP screen appears.
3. If the connection is through the Wi-Fi dongle key, tap : after a while, the sterilizer shows the available networks found. Choose the network, enter the credentials in the following screen, then tap ✓ to confirm: the TCP/IP screen appears.

Note: the and icons are disabled if the connectivity means (cable or Wi-Fi dongle key) are not properly plugged.

Note: in the TPC/IP screen, the ✓ icon is visible only if you make any change. The Wi-Fi icon at the bottom isn't visible if you connect through Ethernet cable.

4. If your network supports dynamic IP addresses (ask your IT manager), enable the options **Dynamic** both in **IP Configuration** and in the **DNS Configuration** fields, then tap ✓ to confirm: all entry fields are disabled.
5. If your network does not support dynamic IP addresses (ask your IT manager), enable the options **Static** both in **IP Configuration** and in the **DNS Configuration** fields. Tap on each entry field and enter the IP addresses (ask your IT manager for details). Then tap ✓ to confirm.

ioDent

DESCRIPTION

It allows to save the data securely and automatically on the cloud and it ensures intelligent and networked reprocessing of instruments, with a wide selection of smart solutions and options.

ACCESS TO IODENT

For the ioDent access proceed as follows:

1. On the homepage, tap ☰ > ⚙ > ((•)) > ioDent.

Note: for more information see the dedicated documentation .

User authentication (optional)

FUNCTION AVAILABILITY

To access the user management functions the **User Management** activation code must be entered. The activation code is required only at the first access to the **User Management** ( ) or the **Options** ( ) menus: after the code was entered, the function is enabled and there is no need to enter the code again.
To acquire the activation code please refer to the Activation code instructions.

PIN MANAGEMENT

PIN “0000” is assigned as default to each new user. It has to be changed at the first login. When the PIN is reset the default value “0000” is reassigned.

CHANGE YOUR PIN

Change your PIN the first time you use the sterilizer and if your PIN has been reset. This will prevent other users from accessing your account.

1. On the homepage, tap ☰ > > .
2. Tap your user name.
3. Enter your current PIN and tap ✓ to confirm.
4. Tap .
5. Enter your new PIN and tap ✓ to confirm: a confirmation message with your new PIN appears.
6. Tap ✓ and then < to return to the previous page.

WHAT TO DO IF YOU FORGET YOUR PIN

If...	Then...
you are a common user	contact the administrator
you are the administrator	contact your authorized service provider

USB pen drive

DESCRIPTION

A USB pen drive is available to be installed in order to automatically record all the sterilization cycle reports. The USB pen drive can be inserted either into the front or rear port (optional).

Notice: periodically remove the USB pen drive to save the cycle data on a computer or on another safe support.

FORMAT THE USB PEN DRIVE

1. Insert the USB pen drive in one USB port.
2. On the homepage, tap ≡ > > .
3. Tap .
4. Tap to confirm: all data will be erased.
5. Tap < to confirm and return to the previous page.

Notice: formatting erases all data from the pen drive. Be sure you have already saved your data on a safe support before formatting.

Standby mode

DESCRIPTION

When in Standby mode, the sterilizer display remains dark and the sterilizer chamber is not heated to save energy. If the device is not used for a certain period of time, it automatically switches to Standby mode.

ENTER THE STANDBY MODE MANUALLY

1. Homepage
2. Tap ⏻.

EXIT THE STANDBY MODE

Tap ⏻ or open or close the chamber door.

CHANGING STANDBY MODE DELAY TIME

1. On the homepage, tap ≡ > > > .
2. Tap or to change the delay time.
3. Tap < to confirm and return to the previous page.

Administrator

CONTENTS

This section deals with the following subjects:

User management (optional) 38
Traceability options (optional) 39

User management (optional)

FUNCTION AVAILABILITY

To access the user management functions the **User Management** activation code must be entered. The activation code is required only at the first access to the **User Management** ( ) or the **Options** ( ) menus: after the code was entered, the function is enabled and there is no need to enter the code again.
To acquire the activation code please refer to the Activation code instructions.

WHO CAN MANAGE USERS AND RESET THEIR PIN

Only a user with administrator rights can create and delete users and reset the PIN code of a user to "0000".

ADD A USER

1. On the homepage, tap > >.
2. Tap your user name.
3. Enter the PIN and tap to confirm.
4. Tap .
5. Tap the text box: a keyboard appears.
6. Enter the new user name and tap to confirm.
7. If desired, tap to give the administrator authority to the new user.
8. Tap to confirm: the PIN of the new user is set to "0000" and a confirmation message appears.
9. Tap and then to return to the previous page.
10. Tap to return to the homepage.

DELETE A USER

1. On the homepage, tap ≡ > > .
2. Tap your user name.
3. Enter the PIN and tap to confirm.
4. Tap .
5. Tap the user name you want to delete.
6. Tap to confirm.

RESET A USER PIN

1. On the homepage, tap ≡ > > .
2. Tap your user name.
3. Enter the PIN and tap to confirm.
4. Tap and the user name for which you want to reset the PIN.
5. Tap to confirm: the PIN is set to "0000" and a confirmation message appears.
6. Tap to return to the homepage.

Note: remember the user to change its PIN before reusing the device (≡ > > >).

Traceability options (optional)

FUNCTION AVAILABILITY

To access the user management functions the **User Management** activation code must be entered. The activation code is required only at the first access to the **User Management** ( ) or the **Options** ( ) menus: after the code was entered, the function is enabled and there is no need to enter the code again.
To acquire the activation code please refer to the Activation code instructions.

WHO CAN SET THE TRACEABILITY OPTIONS

Only a user with administrator rights can set the traceability options.

SET THE TRACEABILITY OPTIONS

1. On the homepage, tap ≡ > > .
2. Tap your user name.
3. Enter your PIN and tap to confirm.
4. Tap the information to be requested to the users at the beginning and at the end of the cycle.
5. If you want the user to check the load and release it as valid at the end of the cycle, tap .
6. Tap < to confirm and return to the previous page.

Managing printers

CONTENTS

This section deals with the following subjects:

Printer selection (optional) 40
Label printer selection (optional) 40
Label printer usage (optional) 41
Label content description 43

Printer selection (optional)

SELECT THE PRINTER

Note: the sterilizer only supports the specific printer models available through the manufacturer/distributor.

1. On the homepage, tap ≡ > > .
2. Tap the model of the printer to use.
3. Tap < to confirm and return to the previous page.

Label printer selection (optional)

FUNCTION AVAILABILITY

The first time you access the **Label Printer** ( ) menu, you will be requested to enter an activaction code. To require the activation code, please refer to the activation code instructions provided with the label printer.

LABEL PRINTER SETUP

Labels can be printed by a local label printer. The local label printer is connected to the sterilizer.

SELECT AND CALIBRATE A LOCAL LABEL PRINTER

1. On the homepage, tap ≡ > > .
2. Tap : the local printer is located automatically.
3. Tap to center the printout properly in the label area.
4. Tap TEST to print a test label.
5. If the printout is not duly centered, tap or to center it horizontally (x) and vertically (y).
6. If necessary, tap TEST to print another test label and repeat step 5.
7. Tap < to confirm the settings and return to the previous page.

Label printer usage (optional)

CAUTION! For your safety and the safety of your patients use a storage time compliant with the recommendations of the manufacturers of the containters/packaging used, and with applicable norms and rules.

FUNCTION AVAILABILITY

The first time you access the **Label Printer** ( ) menu, you will be requested to enter an activaction code. To require the activation code, please refer to the activation code instructions provided with the label printer.

AUTOMATIC PRINTING OPTION

The automatic printing option permits to automatically print a preset number of labels after a successful sterilization cycle. The labels are printed only after the user has identified him/herself (with password if required) and the load has been checked and released, if these options have been enabled by the administrator.

For the automatic label printing, a maximum storage time in weeks can be set. This value is used to calculate the expiry date to be printed on the labels (see "Label content description" on page 43).

SET THE AUTOMATIC LABEL PRINTING

1. On the homepage, tap ≡ > > .
2. Activate **Automatic printing**.
3. Tap or to set the maximum storage time and the number of labels to be printed automatically.
4. Tap < to confirm and return to the previous page.

SET THE MANUAL LABEL PRINTING

The manual printing option permits the user at the beginning of a sterilization cycle to set manually the number of labels to print.

1. On the homepage, tap ≡ > > .
2. Activate **Manual printing**.
3. Tap < to confirm and return to the previous page.

DISABLE THE LABEL PRINTING

If the label printing is disabled, no label can be printed at the end of a sterilization cycle.

1. On the homepage, tap ☰ > > .
2. Activate **Disabled**.
3. Tap < to confirm and return to the previous page.

Label content description

STRUCTURE

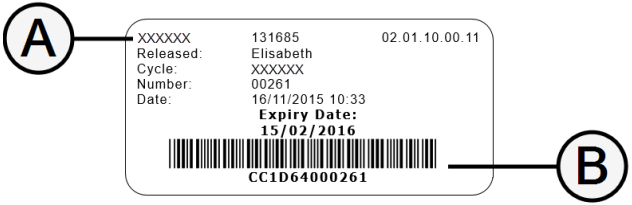

Part	Description
A	■ Sterilizer model ■ Serial number ■ Software release
B	Traceability code (alphanumerical and bar code)
Released	Depending on the traceability settings, this field may contain one of the following elements: ■ the user who released the cycle ■ the user who started the cycle ■ the sterilizer ID
Cycle	Cycle name
Number	Cycle number
Date	Date and time of cycle start
Expiry date	■ Expiry date of the bag/package. ■ The cycle outcome if a storage time is not set.

Device tests

CONTENTS

This section deals with the following subjects:

Device performance tests 44
Bowie and Dick test 45
Helix Test 48
Vacuum Test 51

Device performance tests

TESTS THAT CAN BE PERFORMED ON THE DEVICE

Test	Purpose	Reference
Bowie and Dick test	Validate the sterilizer performance for textile load sterilization	See "Bowie and Dick test" on the next page
Helix Test	Validate the sterilizer performance for hollow items	See"Helix Test" on page 48
Vacuum Test	Validate the sterilizer performance in terms of: ■ efficiency of the vacuum pump ■ tightness of the pneumatic circuit	See "Vacuum Test" on page 51

Bowie and Dick test

CAUTION! Follow local/national guidelines on the frequency of testing.

PURPOSE OF THE TEST

The test is used to validate the sterilizer performance for textile load sterilization.

DESCRIPTION

It consists of several sheets of paper wrapped in a small packet with a chemical heat-sensitive indicator sheet in the middle. The colour assumed by this indicator sheet at the end of the sterilization cycle gives the result of the test.

CARRY OUT THE TEST

Note: carry out the test according to the local Regulations.

Note: to take advantage of the traceability benefits, a W&H test must be used.

1. On the homepage, tap **Helix/B&D Test**.
2. Empty the sterilization chamber to ensure no load is present. Remove all trays from the sterilization chamber, except the lowest one.
3. *Optional*: scan the QR code of the B&D test pack and tap ✔ to confirm the scanned test (only with QR code / Bar code reader for labels connected).
4. Place the B&D test pack in the center of a tray in the lowest rack position and close the chamber door.

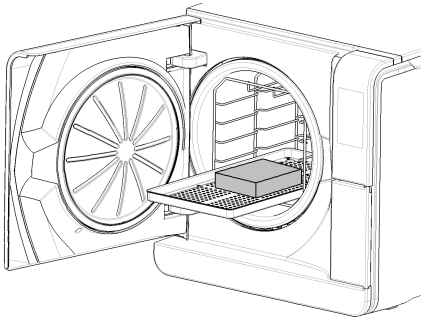

5. To set the duration of the Plateau/Sterilization phase and other settings, tap ⚙.
6. Tap ▶ and enter your credentials if required: the chamber door locks. If you have not set a different start time (see "Set the sterilization cycle start" on page 57), the test starts immediately.
7. Wait until the end of the test and tap **OPEN**: the chamber door unlocks.
8. Enter your credentials if required.
9. Open the chamber door, extract the tray using the tray holder and take the test pack. The test pack can be wet outside.

   ⚠ **CAUTION!** Risk of burns. The test pack is very hot at the end of the cycle. Wear appropriate PPE (e.g. gloves).

10. Remove the indicator sheet from the center of the test pack and check the change in colour. See "Interpret the test result" on the next page.
11. *Optional*: to validate the result, scan the QR code on the test sheet (only with QR code / Bar code reader for labels connected); the test report is saved in the HTML file.

Note: for more information on test traceability, see the dedicated documentation.

INTERPRET THE TEST RESULT

Indicator	What happened	Test passed	What to do next
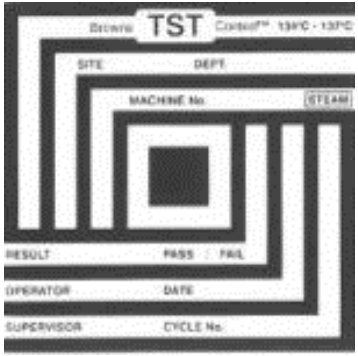	The entire surface of the indicator sheet has changed colour.	Yes	-
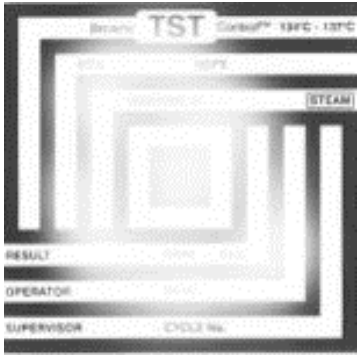	Certain areas of the indicator sheet have not changed colour since there was an air pocket during the cycle due to sterilizer malfunction.	No	Repeat the test. If it fails repeatedly, contact technical service.

Helix Test

CAUTION! Follow local/national guidelines on the frequency of testing.

PURPOSE OF THE TEST

The test is used to validate the sterilizer performance for hollow items.

DESCRIPTION

It consists of a 1.5 m long tube open on one side and closed with a capsule containing a chemical indicator strip on the other side. The colour assumed by this indicator strip at the end of the sterilization cycle gives the result of the test.

CARRY OUT THE TEST

Note: carry out the test according to the local Regulations.

Note: to take advantage of the traceability benefits, a W&H test must be used.

1. On the homepage, tap **Helix/B&D Test**.
2. Empty the sterilization chamber to ensure no load is present. Remove all trays from the sterilization chamber, except the lowest one.
3. Unscrew the tube capsule and place inside it an indicator strip according to the instructions of the test manufacturer.
4. Screw the capsule.

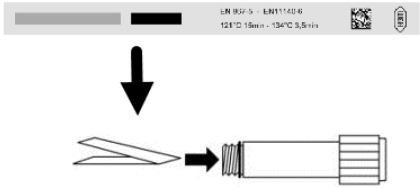

6 Place the tube with the capsule in the center of a tray in the lowest rack position and close the chamber door.

7 To set the duration of the Plateau/Sterilization phase and other settings, tap ⚙.

8 Tap ▶ and enter your credentials if required: the chamber door locks. If you have not set a different start time (see "Set the sterilization cycle start" on page 57), the test starts immediately.

9 Wait until the end of the test and tap **OPEN**: the chamber door unlocks.

10 Enter your credentials if required.

11 Open the chamber door, extract the tray using the tray holder and take the tube.

CAUTION! Risk of burns. The tube is very hot at the end of the cycle. Wear appropriate PPE (e.g. gloves).

12 Unscrew the tube capsule and remove the indicator strip.

13 Check the change in colour. See "Interpret the test result" on the next page.

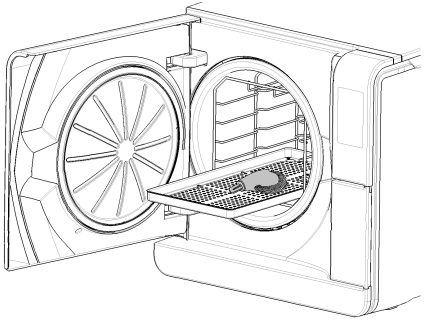

INTERPRET THE TEST RESULT

Indicator	What happened	Test passed	What to do next
	The indicator strip has changed colour. The air was completely removed from the capsule.	Yes	-
	Part of the indicator strip has not changed colour. The air removal from the capsule was not complete.	No	Repeat the test. If it fails repeatedly, contact technical service.
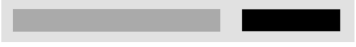	The indicator strip has not changed colour. The air has not been removed from the capsule.	No	Repeat the test. If it fails repeatedly, contact technical service.

WHAT TO DO NEXT

Compile the Helix Test documentation form to trace the effectiveness of the sterilization cycle during the whole lifespan of your sterilizer. See "Helix Test documentation form" on page 127.

Vacuum Test

CAUTION! Follow local/national guidelines on the frequency of testing.

Notice: if a drainage period of the S Fast 134 cycle is still operating, wait the drainage to be finished and the sterilizer to be both cold and dry. Otherwise, a false negative outcome could occur.

PURPOSE OF THE TEST

The test is used to validate the sterilizer performance in terms of:

- efficiency of the vacuum pump.
- tightness of the pneumatic circuit.

DESCRIPTION

It consists of a vacuum phase, followed by a stabilization period of 5 minutes and a testing period of 10 minutes. The internal pressure is monitored during the testing period. The pressure rise must be less than 0.013 bar (0.19 psi).

CARRY OUT THE TEST

1. Empty the sterilization chamber to ensure no load is present.
2. Close the chamber door and ensure the sterilization chamber is completely dry and cold to avoid any false negative outcome.

3. On the homepage, tap **Vacuum Test**.
4. Tap ▶ and enter your credentials if required: the chamber door locks. If you have not set a different start time (see "Set the sterilization cycle start" on page 57), the test starts immediately.
5. Wait until the end of the test and tap **OPEN**: the chamber door unlocks.
6. Enter your credentials if required: a message informs if the test passed or failed. If the test failed, see "What to do when the test failed" below.

WHAT TO DO WHEN THE TEST FAILED

1. Check, clean or replace the door gasket (see "Ordinary maintenance" on page 65).
2. Clean the chamber face side and the chamber filter (see "Ordinary maintenance" on page 65).
3. Repeat the Vacuum Test. See "Carry out the test" on the previous page.
4. If the test fails repeatedly, contact technical service.

Sterilization cycles

CONTENTS

This section deals with the following subjects:

Load maintenance and preparation 53
Prepare the sterilizer 55
Sterilization cycle description 55
Sterilization cycle management 56
Unloading 59
Sterilization cycle report 59

Load maintenance and preparation

WARNINGS

WARNING! Any residual of chemicals (like cleaning and disinfection products), could affect the purity of the steam and consequently the whole sterilization process. If necessary, the load shall be cleaned and lubricated in accordance with the instrument manufacturer's instructions.

Notice: any residual of chemicals could seriously damage the sterilizer. The manufacturer's warranty is void in case of damage caused by chemicals.

CLEANING THE INSTRUMENTS

Clean all instruments thoroughly prior to sterilization. If possible, clean instruments immediately after use; always follow the instrument manufacturer 's instructions. Remove all traces of disinfectants and detergents. Rinse and dry carefully all instruments.

The instruments and tubes must be carefully rinsed and dried prior to sterilization.

CORRECT LOAD PLACEMENT

WARNING! Do not overload trays and the chamber. Adhere to the maximum load weight limits (see "Sterilization cycles" on page 104).
Never place the load or the trays directly into the chamber without the chamber rack as this could affect the steam and temperature distribution. The load must always be supported by the chamber rack.
Risk of burns. Before touching, ensure the sterilization chamber is cold.

Wrap items with porous wrapping materials to facilitate steam penetration and drying (e.g. sterilization bags for autoclaves).

WARNING! Always use the chamber rack. Failing to use the chamber rack can damage the unit and could affect adequate steam circulation.

Follow these requirements:

Load type	Placement
Hinged instruments (e.g., forceps, extraction pliers, etc.)	In open position.
Tubes	Place tubes on a tray allowing the ends to remain open. Do not bend tubes.
Cassettes	Cassettes can be placed vertically or horizontally into the chamber rack (vertical placement enhances drying). When placing cassettes horizontally, slide them into the rack position without putting them on trays (if size allows) to enhance drying. When sterilizing double-decker cassettes, place them in the lowest rack position as there is more space height-wise.
Pouched items	On trays allowing adequate space in-between bags. Ensure that packs do not touch the walls of the chamber. Place sterilization pouched items with the paper side facing up. 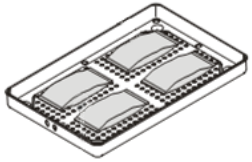
Empty containers or non-perforated trays	Upside down to prevent accumulation of water.
Items made from different materials (stainless steel, carbon steel, aluminium, etc.)	On separate trays or wrapped/pouched.
Instruments manufactured from carbon steel	Place paper among them and the trays to avoid rusty spots.
Chemical indicator and Helix strip/s	For more information see the dedicated documentation.

PARTIAL LOAD

If the chamber is only partially loaded, place the load in such a way that the space in-between the trays is maximized. Spread items evenly on multiple trays. Below is an example with five trays.

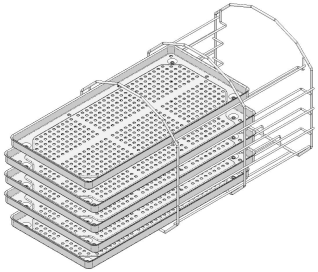

Prepare the sterilizer

WARNINGS

Notice: use only distilled or demineralized water (see "Feed water specifications (EN 13060)" on page 115 for technical requirements). Do not add any chemical / additive to the water.

FILLING THE CLEAN WATER TANK

1. Switch the sterilizer ON and remove the tank filling cover-cap.
2. Fill the clean water tank with distilled or demineralized water until the sterilizer makes a sound. See "Technical data" on page 111 for the tank volume.
3. Reposition the tank filling cover-cap.

INSERTING THE CHAMBER RACK INTO THE STERILIZER

CAUTION! Risk of burns. Before touching the chamber rack or contents, ensure the sterilization chamber is not hot.

1. Open the chamber door and align the chamber rack at the center/bottom of the chamber.
2. Push the chamber rack gently into position until it clicks into place.
3. Insert cassettes horizontally or vertically, or insert trays. See "Load maintenance and preparation" on page 53 for load requirements and "Chamber accessories" on page 24.
4. Close the door.
5. Turn the sterilizer ON: after the initialization the homepage appears.

GENERAL RECOMMENDATIONS

Follow these recommendations to obtain the most from the drying:

- Ensure the paper side of the sterilization bags faces up, and that the space in-between bags is enough.
- To enjoy the full benefit of short cycle times when only one tray is used, always place the load on the upper tray of the chamber rack and remove all other trays from the chamber.

Sterilization cycle description

AVAILABLE STERILIZATION CYCLES

See "Sterilization cycles" on page 104 for the full list of key program features, including sterilization time, temperature and recommended load type.

AVAILABLE AUTOMATIC DRYING MODES

Icon	Mode	Description
	AUTO DRY	It is available for type B sterilization cycles. The drying time is automatically adjusted to the load weight. The recognized load weight categories are the following: ■ light: less than 0.5 kg (1.1 lbs) ■ medium: between 0.5 and 2 kg (from 1.1 to 4.4 lbs) ■ heavy: more than 2 kg (4.4 lbs) Each weight category has a specific drying time.
	ECO DRY plus	Optional, activated with the Performance activation code. The drying time is automatically adjusted to the shortest possible for the actual load weight and so it is more precise than the AUTO DRY drying time.

ECO DRY PLUS MODE ACTIVATION

Note: if you have entered the All in One activation code in **Special Codes** menu, the function is already available.

To activate the ECO DRY plus mode is required the Performance activation code. To require the activation code please refer to the Activation code instructions.

To activate the function proceed as follows:

Note: the ECO DRY mode substitutes the AUTO DRY mode.

1. On the homepage, tap ≡ > > .
2. Enter the activation code issued by the manufacturer and tap ✔ to confirm.

Sterilization cycle management

RUN A STERILIZATION CYCLE IMMEDIATELY

1. On the homepage, tap the desired cycle.
2. Check the cycle requirements.
3. Check the icon in the top left corner of the page to know the drying mode assigned to the cycle.
4. Tap to disable the drying mode (see "Set the drying time" on the next page).
5. If the door gasket is new, hold the door gently closed until step 7.
6. Tap ▶ and enter your credentials if required: the door locks. If you have not set a different start time, the sterilization starts immediately.
7. Wait the end of the sterilization. Tap i to view the cycle parameters in real time. See "View the cycle parameters" on page 58.
8. The sterilization is completed. Tap to view the cycle summary or tap i to view the cycle information. See "View the cycle parameters" on page 58.
9. Tap **OPEN**: the door unlocks.

10 If required, enter your credentials and confirm the release of the load.

Note: the load release is possible only if the cycle is completed successfully.

Note: the user visually checks that pouches are intact and dry. It is even possible to identify the user who releases the load, accepts the cycle plateau time and cycle minimum temperature.

Note: during the load release it is also possible to accept or reject the chemical indicator and Helix strip results (for more information see the dedicated documentation).

SET THE STERILIZATION CYCLE START

You may schedule the start of the sterilization cycles at a certain date and time (e.g., if you want to load the sterilizer in the evening and run standard sterilization cycle early the next morning before office hours). You can set the cycle start date and time and enable or disable it for each cycle.

1. On the homepage, tap the cycle and ⚙.
2. If you need, set the drying time.
3. To change the start time, tap **Start cycle at**.
4. Tap the time or the date: a settings page opens.
5. Tap the number you want to change and tap ⌃ or ⌄ to increase it or decrease it.
6. Tap ‹ to confirm and return to the previous page.
7. Tap ▶ to lock the door; a new page appears.

Note: if nothing else is pressed, the cycle will start at the programmed time. The page allows also to start the cycle immediately ("Start now") or to delete the operation and the programmed cycle ("Stop").

SET THE DRYING TIME

The drying time of the AUTO DRY and ECO DRY plus modes is automatically adjusted to the total amount of load and cannot be modified (see "Available automatic drying modes" on the previous page). To set a new drying time for the program, you should disabled the AUTO DRY and ECO DRY plus modes first.

1. On the homepage, tap the cycle and ⚙.
2. Select **Fixed** to disable the automatic drying mode.
3. Tap **Fixed** to modify the fixed mode minutes.
4. Tap ⌃ or ⌄ to increase the minutes or decrease them.

Note: for the minimum value of the drying time for each cycle see "Sterilization cycles" on page 104.

5. Tap ‹ to confirm and return to the previous page. This becomes the new fixed value.

CHANGE THE DRYING MODE

The AUTO DRY mode is the default one. To activate the ECO DRY plus mode see "ECO DRY plus mode activation" on the previous page.

VIEW THE CYCLE PARAMETERS

You can check the real-time cycle parameters or the cycle parameters at the end of the cycle. Following is an example:

1. While the sterilization cycle is running or when cycle ends tap i : the cycle information page opens.
2. Tap < or > to scroll the pages.

STERILIZATION CYCLE PAGE

Following are the information displayed while a cycle is running:

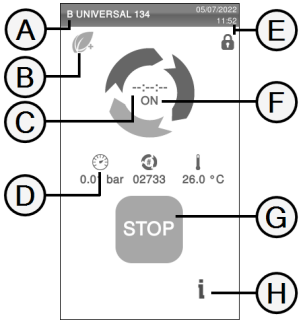

Part	Description
A	Sterilization cycle name
B	Drying mode enabled
C	Countdown clock (time until the cycle completion)
D	: chamber pressure : cycle counter : chamber temperature
E	Date and time and door securely locked symbol
F	Current cycle phase
G	Stop button
H	Button to open the cycle information page

END OF A STERILIZATION CYCLE

When a cycle is successfully finished, the "Cycle completed" message appears on the screen. To end the cycle:

1. Tap to view the cycle summary or tap i to view the cycle parameters. See "View the cycle parameters" above.
2. Tap **OPEN** to open the door: the door unlocks and the home page appears.

Note: if an error message appears see "Troubleshooting" on page 93

CAUTION! Hot surfaces. Burnings. Do not touch the chamber, the internal side of the door and the internal fittings. Use the tray holder or cassette holder or gloves for high temperatures or adequate protection to remove the load!

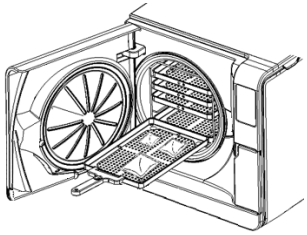

3. Open the chamber door.
4. Remove the load and stock it.

STOP A STERILIZATION CYCLE

WARNING! You can stop the cycle at any time. Instruments must not be considered sterile if this occurs before the DRY phase.

A cycle can be manually aborted at any time. To stop a cycle:

1. Tap **STOP**: a confirmation request appears.
2. Tap ✕ to abort the stop command. The cycle continues as programmed.
3. Tap ✓ to abort the cycle: the sterilizer starts a reset phase.

Notice: do not switch off the sterilizer during the reset phase: it takes some time to reset the system and reach safe conditions in the sterilizer chamber.

4. Check the message. See "Messages of a stopped sterilization cycle" below.
5. Tap i to view the cycle parameters. See "View the cycle parameters" on the previous page.
6. Open the chamber door.
7. Reprocess the load if necessary.

CAUTION! Hot steam. Wait the steam to dissipate before opening the door.

Note: water could be present in the chamber when opening the door. To prevent spilling place a towel below the chamber door.

MESSAGES OF A STOPPED STERILIZATION CYCLE

The following are the messages:

- Load not sterile: Do not use items on patients!
- Drying interrupted: The load might be wet. Wet items are for immediate use only!

Unloading

WARNINGS

CAUTION! Risk of burns. Before touching, ensure the sterilization chamber is cold. Always use the tray holder.

Sterilization cycle report

WHERE CYCLE DATA ARE STORED

The sterilizer stores in its memory the summarized reports of the last 400 cycles and the analytical reports of the last 5 cycles. All reports can also be saved on the USB pen drive.

STORED REPORT FORMAT

The summarized reports are stored in HTML format and the analytical reports in SCL format. All parameters are recorded every second.

WHAT HAPPENS WITH UNSAVED CYCLES

If for any reason (e.g. USB memory full, USB pen drive disconnected, etc.) some cycles cannot be saved, no alert is shown. If still stored in memory, the unsaved cycles will be copied to a working USB pen drive connected to the sterilizer as soon as a new cycle starts.

VIEW CYCLE HISTORY

To view the sterilization cycle history:

1. On the homepage, tap ≡ > > : all the sterilization cycles are listed with number, date, time and sterilization program. The sterilization cycle interrupted due to a cycle error or problem appears in red.
2. Scroll the list and tap the desired sterilization cycle: the report opens.

PRINT OR SAVE A CYCLE REPORT ON THE USB PEN DRIVE

1. On the homepage, tap ≡ > > .
2. Scroll the list and tap the desired sterilization cycle: the report opens.
3. Tap ••• .
4. Tap to print the report, or tap to save the report on the USB pen drive.

PRINT LABELS FOR A SPECIFIC CYCLE

Note: function available only with the Label printer activation code.

1. On the homepage, tap ≡ > > .
2. Scroll the list and tap the desired sterilization cycle: the report opens.
3. Tap ••• .
4. Tap to print traceability labels for the selected cycle.
5. Tap or to increase or decrease the number of label to be printed.
6. Tap to save the set number for the next time.
7. Tap to print the labels required.

SAVE ALL THE CYCLE REPORTS ON THE USB PEN DRIVE

The number of reports that can be saved on the USB pen drive depends on upon the USB capacity. To save all the cycle reports:

1. On the homepage, tap ≡ > > .
2. Tap : after the confirmation all sterilization cycle reports are stored in the USB.

SET THE REMOTE FOLDER FOR SAVING THE REPORTS

To activate the remote storage and set the necessary parameters proceed as follows:

1. On the homepage, tap ≡ > ⚙ > 🖥 > 🖥.
2. Tap ⊙ ✕ to enable the remote data storage: the first four fields in the page and the check box turn dark grey.
3. In **Path** enter the name of the shared folder followed by the sub-folder name, if any, where to save reports. Do not enter the full path.

Note: The folder name must include letters and numbers only. Do not use other characters like space-bar, slash, accent, etc.

4. Enter the host name or the IP address: if the data are complete, the fields highlight.
5. Not mandatory. Enter the domain name.
6. Tap ☐ to require the authentication credentials to access the remote storage folder and enter the username and password.
7. Tap ✔ to save.
8. Tap ‹ to return to the previous page.
9. To check if the parameters entered are valid, see "Test the data storage " below.

TEST THE DATA STORAGE

Note: the test function is available only if the remote data storage is enabled. See "Set the remote folder for saving the reports" above.

1. On the homepage, tap ≡ > ⚙ > 🖥.
2. Tap TEST: a sequence of tests is automatically performed.
3. If a test fails, check the relevant settings and tap ↻ to repeat the test sequence. If the error persists, contact your IT manager.
4. Tap ‹ to return to the previous page.

SAVE ALL THE CYCLE REPORTS IN A REMOTE FOLDER

Note: the save all function is available only if the remote data storage is enabled. See "Set the remote folder for saving the reports" above.

Only the last 400 cycles in HTML and 5 cycles in SCL in the sterilizer memory can be saved in the remote folder.

1. On the homepage, tap ≡ > ⚙ > 🖥 > 🖥.
2. Tap ✔ to start the remote saving.

CYCLE REPORT STRUCTURE

Following is the structure of a cycle report:

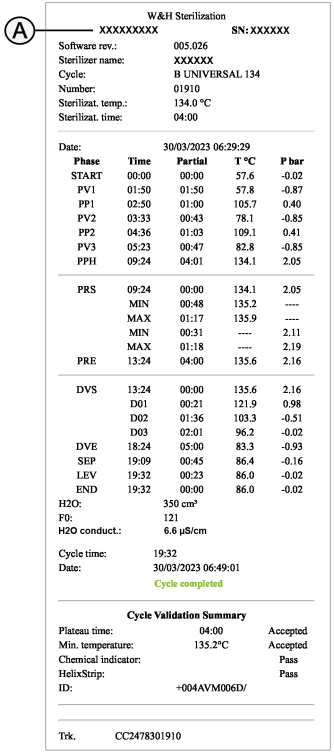

W&H Sterilization

A — XXXXXXXXX SN: XXXXXX

Software rev.: 005.026
Sterilizer name: XXXXXX
Cycle: B UNIVERSAL 134
Number: 01910
Sterilizat. temp.: 134.0 °C
Sterilizat. time: 04:00

Date: 30/03/2023 06:29:29

Phase	Time	Partial	T °C	P bar
START	00:00	00:00	57.6	-0.02
PV1	01:50	01:50	57.8	-0.87
PP1	02:50	01:00	105.7	0.40
PV2	03:33	00:43	78.1	-0.85
PP2	04:36	01:03	109.1	0.41
PV3	05:23	00:47	82.8	-0.85
PPH	09:24	04:01	134.1	2.05
PRS	09:24	00:00	134.1	2.05
	MIN	00:48	135.2	----
	MAX	01:17	135.9	----
	MIN	00:31	----	2.11
	MAX	01:18	----	2.19
PRE	13:24	04:00	135.6	2.16
DVS	13:24	00:00	135.6	2.16
	D01	00:21	121.9	0.98
	D02	01:36	103.3	-0.51
	D03	02:01	96.2	-0.02
DVE	18:24	05:00	83.3	-0.93
SEP	19:09	00:45	86.4	-0.16
LEV	19:32	00:23	86.0	-0.02
END	19:32	00:00	86.0	-0.02

H2O: 350 cm³
F0: 121
H2O conduct.: 6.6 µS/cm

Cycle time: 19:32
Date: 30/03/2023 06:49:01
Cycle completed

Cycle Validation Summary

Plateau time:	04:00	Accepted
Min. temperature:	135.2°C	Accepted
Chemical indicator:		Pass
HelixStrip:		Pass
ID:	+004AVM006D/	

Trk. CC2478301910

Data	Description
A	Sterilizer model
SN	Sterilizer serial number
Software rev.	Software revision number
Sterilizer Name	Surgery – practice – doctor name
Cycle	Name of the executed cycle
Number	Cycle counter
Sterilizat. temp.	Programmed sterilization temperature
Sterilizat. time	Programmed Plateau/Sterilization
Date	Cycle start date and time
START	Cycle start
PV1, PP1, PV2, PP2, PV3, PP3	Pressure and vacuum pulses
PPH	Phase of pressure rise to sterilization conditions
PRS	Plateau/Sterilization phase start: ■ MIN, MAX temperature ■ MIN, MAX pressure
PRE	Plateau/Sterilization phase end
DVS	Drying phase start
DVE	Drying phase end
SEP	Chamber venting phase
LEV	Pressure leveling phase

Data	Description
END	Cycle end conditions
H2O	Cycle water consumption
F0	F0 value
H2O conductivity	Cycle water conductivity
Cycle time	Cycle time
Date (below)	Cycle end date and time
"Cycle completed"	Cycle outcome
Cycle Validation Summary	Cycle validation (you can choose to accept or reject the results): ■ Plateau time ■ Min. temperature ■ Chemical indicator ■ Helix strip/s
Trk.	Tracking code for traceability management

Maintenance

CONTENTS

This section deals with the following subjects:

Warnings for maintenance operations 64
Ordinary maintenance 65
50-cycle or monthly maintenance 67
400-cycle maintenance 73
800-cycle or biannual maintenance 76
800-cycle maintenance 83
4000-cycle or five-year maintenance 85
Extraordinary maintenance 86
Disposal 87

Warnings for maintenance operations

WARNINGS

WARNING! Turn the sterilizer OFF and remove the mains cable before beginning any maintenance. Follow all health, safety, cross-infection and cross-contamination protocols.
Maintenance operation shall be done at illumination level of 215 lx (±15 lx) to 1500 lx (±15 lx).
Before making any operation, ward off unauthorized personnel from the working area.

CAUTION! Before accessing the chamber and the connected parts, be sure that the sterilizer is cold.

Notice: follow the instructions in this chapter when carrying out any maintenance on the sterilizer.

Ordinary maintenance

MAINTENANCE BY THE USER

Frequency [1]	Cycles [1]	Operation
Monthly	50	Cleaning the door gasket and the chamber face side. See "Cleaning the door gasket and the chamber face side" on page 67. Clean the chamber, trays and the rack. See "Cleaning the chamber and the chamber accessories" on page 68. Cleaning the chamber filter. See "Cleaning the chamber filter" on page 69. Cleaning the external surfaces of the sterilizer. See "Cleaning the external surfaces of the sterilizer" on page 72.
6 month	800	Clean both water tanks. See "800- cycle or biannual maintenance" on page 76.
Yearly [2]	400 [2]	Replace the bacteriological filter. See "400-cycle maintenance" on page 73. Replace the dust filter. See "400- cycle maintenance" on page 73
Yearly [2]	800 [2]	Replace the door gaskets. See "800- cycle maintenance" on page 83.
5 years	4000	General check and service. See "4000-cycle or five-year maintenance" on page 85.

1: whichever occurs first.

2: even if the maximum cycle number is not reached, it is recommended to replace the consumable parts every year, or if they appear worn or damaged, or if the filters are clogged or discolored.

*: optional.

EXPIRED MAINTENANCE

The sterilizer monitors the wear of consumables by counting the number of cycles executed since the last replacement.

When the number of cycles is close to the maximum, a pre-alert about the concerned consumable is displayed. Please check that you have the requested spare part available, buy one if not. When the maximum number of cycles has been met, a message to replace the consumable will be displayed.

If you can not replace the consumable immediately, the sterilizer will operate anyway but the message will appear again some cycles later.

1. When you have replaced the consumable tap ✔ to confirm: the executed cycle counter is reset.

REPLACE THE CONSUMABLE BEFORE THE MAINTENANCE DUE DATE

If you replace the consumables before the request of replacement appears, you should manually reset the counters through the following procedure.

1. On the homepage, tap ≡ >
2. Select the consumable you want to replace: a message appears showing the current worked hours of the part.
3. When you have replaced the consumable tap to confirm: the executed cycle counter is reset.

50-cycle or monthly maintenance

CLEANING THE DOOR GASKET AND THE CHAMBER FACE SIDE

Proceed as follows:

1. Clean the gasket seat and the chamber face side with a damp, lint-free cloth moistened with clean water.
   Notice: do not use abrasive products, cutting tools or sharp objects.
2. Rinse with clean water.

Note: when the seal is new it might be necessary to hold the door gently closed at the sterilization start.

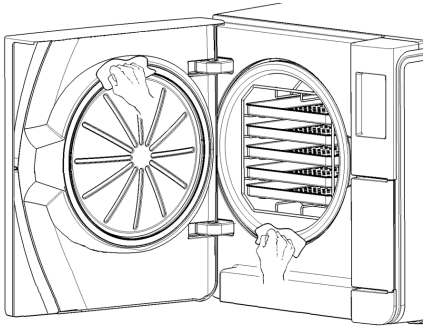

CLEANING THE CHAMBER AND THE CHAMBER ACCESSORIES

Proceed as follows:

1. Remove the trays and the chamber rack.
2. Clean the chamber with a damp sponge and a mild detergent solution paying attention not to bend or damage the temperature probe inside the sterilizer chamber.
3. Rinse with water.
4. Clean the trays and the chamber rack with a damp sponge and a mild detergent solution.
5. Rinse with water.
6. Reposition all pieces of the chamber accessories properly.

Note: the trays and the tray holder may also be cleaned in a washer disinfector.

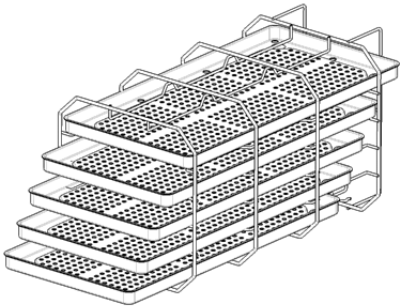

CLEANING THE CHAMBER FILTER

Proceed as follows:

1. Allow the sterilization chamber to cool down.
2. Empty the sterilizer chamber by removing the trays and the rack.
3. Turn the filter cap at the back of the chamber (bottom/center) counter-clockwise.

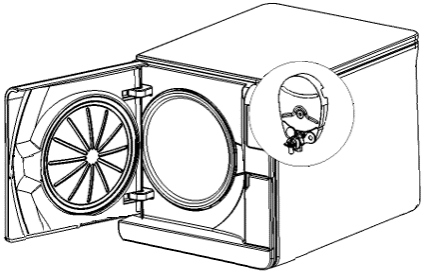

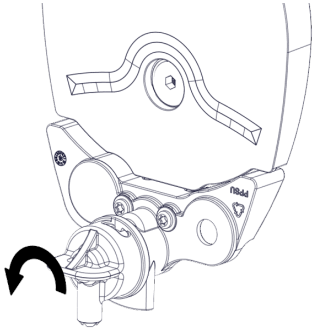

4 Remove the filter cap and the cartridge filter.

5 Rinse the cartridge filter with tap water.

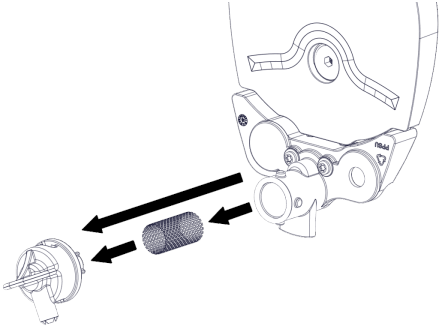

6 Insert the cartridge filter in the filter cap.

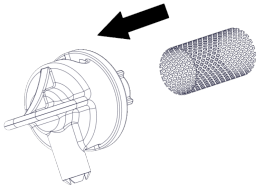

7 Insert the filter cap with the cartridge filter in its original position.

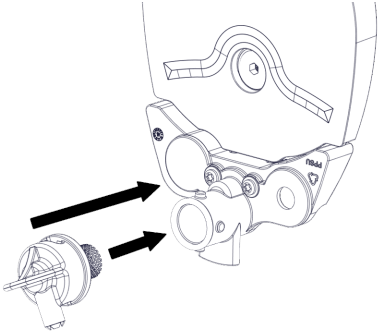

8 Lock the filter cap by turning it clockwise.

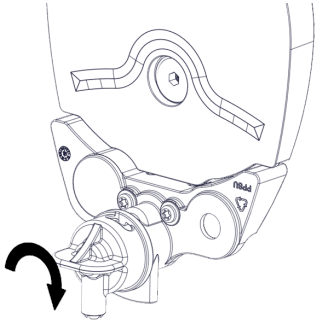

CLEANING THE EXTERNAL SURFACES OF THE STERILIZER

Proceed as follows:

1. Clean all external sterilizer covers with a slightly damp cloth moistened with water. For better cleaning results, clean with W&H MC-1000 cleaning solution.
   Note: for cleaning operations, do not dilute the W&H MC-1000 cleaning solution.
   Notice: never use any other disinfectant, detergent or abrasive product, as they might result aggressive for the tank material.

400-cycle maintenance

REPLACING THE BACTERIOLOGICAL FILTER

Notice: if you replace this consumable before the maintenance due date you have to reset the cycle counter. See "Replace the consumable before the maintenance due date" on page 66.

Proceed as follows:

1. Open the service door.
2. Unscrew the bacteriological filter by hand (counter-clockwise).
3. Screw on the new bacteriological filter (clockwise) and tighten it snug.

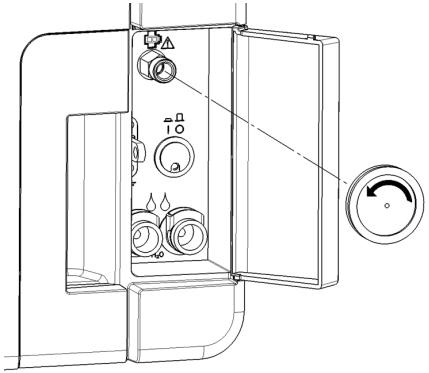

REPLACING THE DUST FILTER

Notice: if you replace this consumable before the maintenance due date you have to reset the cycle counter. See "Replace the consumable before the maintenance due date" on page 66.

Proceed as follows:

1. Open the chamber door.
2. Pull out the dust filter handle from underneath the sterilizer.

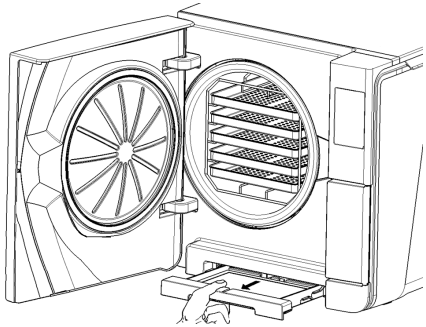

3. Lift the used filter from the handle and remove it.

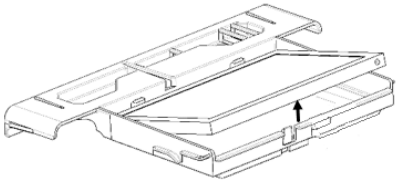

4 Insert the new filter into the handle.

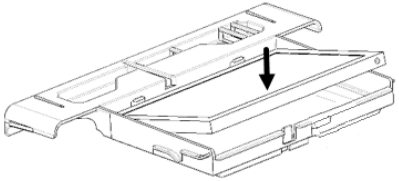

5 Slide the handle back into its original position.

6 Close the chamber door.

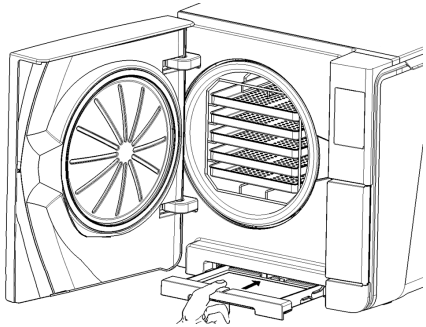

800-cycle or biannual maintenance

SEQUENCE OF PROCEDURES TO CLEAN THE WATER TANKS

To clean the water tanks, proceed as follows:

1. "Prepare the sterilizer for cleaning the water tanks" on the next page.
2. "Access to the water tanks" on page 78.
3. "Clean the water tanks" on page 80.

PREPARE THE STERILIZER FOR CLEANING THE WATER TANKS

Proceed as follows:

1. Switch OFF the sterilizer and disconnect the mains cable.
2. Completely drain both water tanks (see "Draining the used and clean water tank" on page 86).
3. To drain the detergent solution during the subsequent cleaning, leave the drain tube attached to the drain connection of the tank you want to clean.

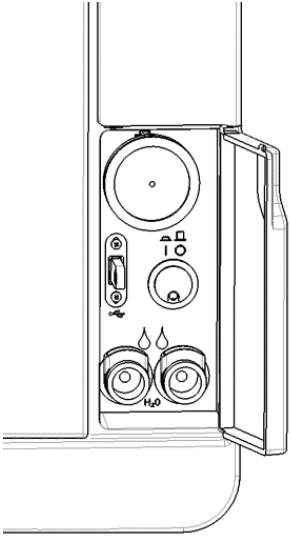

ACCESS TO THE WATER TANKS

Proceed as follows:

1. Lift the water tank cover.

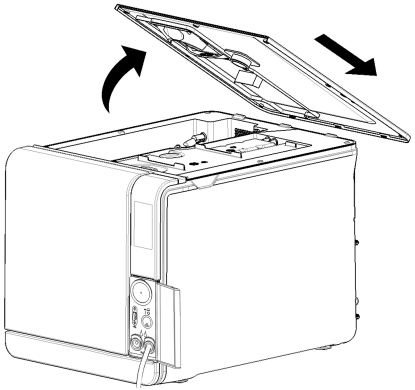

2 Remove the internal tank cover.

3 Clean and dry the internal tank cover and its rubber membrane to eliminate any condensate.

Notice: never use disinfectants, strong detergents or abrasive products. Use a slightly damp cloth moistened with water.

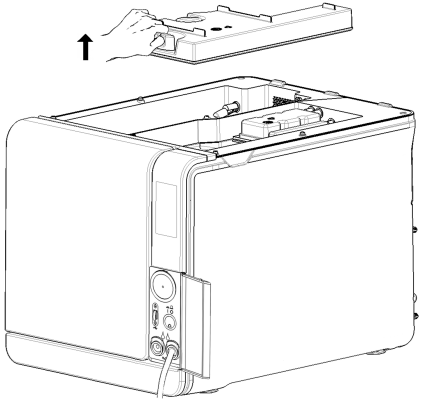

CLEAN THE WATER TANKS

Notice: Do not touch the water level sensors. If misplaced or misaligned from their original position, the operation of the sterilizer could be impaired.

Proceed as follows:

1. Clean the internal tank surfaces with a soft sponge moistened with water. For better cleaning results, clean with W&H MC-1000 cleaning solution. Use a small non-abrasive brush to clean the areas that are difficult to reach.
   Note: for cleaning operations, do not dilute the W&H MC-1000 cleaning solution.
   Notice: never use any other disinfectant, detergent or abrasive product, as they might result aggressive for the tank material.
2. Rinse the internal tank surfaces thoroughly, until all residuals of dirt and detergent have been eliminated.
3. Dry the internal tank surfaces.
4. Detach the drain tube, attach it to the drain connection of the other tank and repeat steps 1, 2, 3.

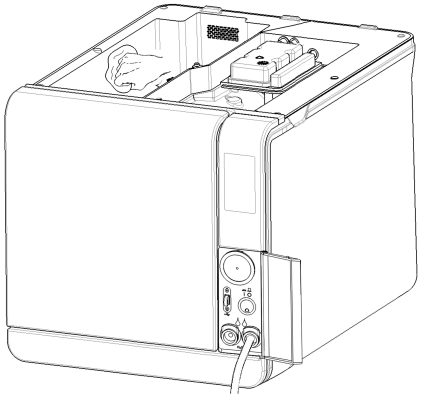

5 Remove the internal filters.

6 Clean the metal cartridges of the internal filters with tap water.

7 Reposition the internal filters.

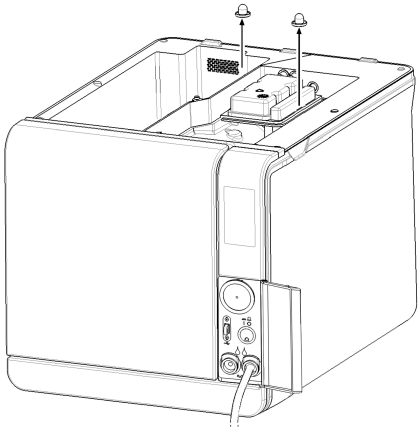

8 Reposition the internal tank cover and then the water tank cover.

9 Detach the drain tube.

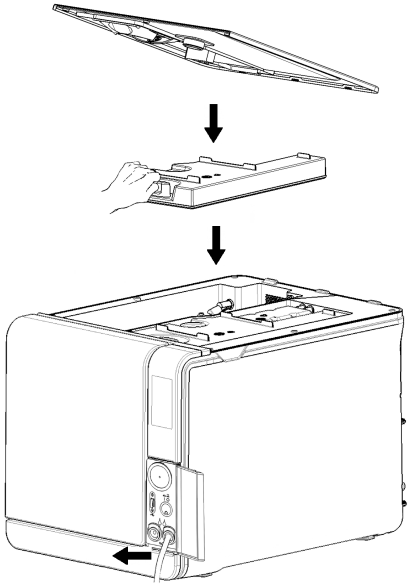

800-cycle maintenance

REPLACING THE DOOR GASKET

Notice: if you replace this consumable before the maintenance due date you have to reset the cycle counter. See "Replace the consumable before the maintenance due date" on page 66.

Proceed as follows:

1. Fully open the chamber door.
2. Remove the used door gasket by hand.
3. Carefully clean the gasket seat and the chamber face side with a damp, lint-free cloth.
4. Moisten the new gasket with water to facilitate its placement.

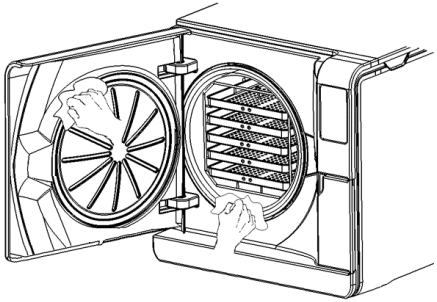

5 Insert the new gasket and press first up and down.

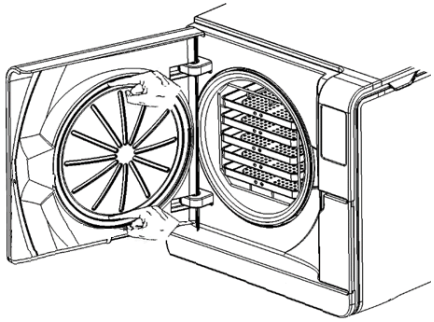

6 Press left and right and then the entire gasket circumference to ensure its perfect placement.
Notice: a steam discharge can damage the sterilizer plastic parts. Ensure the gasket does not stick out.

7 Wipe any residual water and run a Vacuum and Helix test to check for perfect tightness of the gasket. See "Vacuum Test" on page 51 and "Helix Test" on page 48.

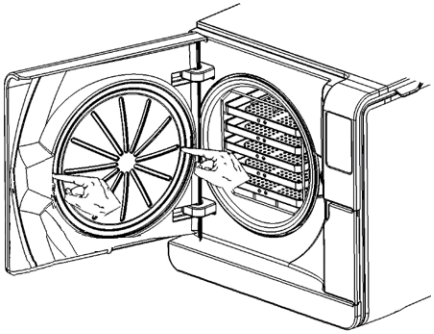

4000-cycle or five-year maintenance

GENERAL CHECK AND SERVICE REQUIRED

Notice: regular service is imperative to ensure continuous and effective operation of the sterilizer.

A general check and service should be carried out every 4000 cycles or five years by an authorized service technician. The service required includes the following:

- the replacement of consumables and other important internal components
- a check of the entire sterilizer with special care for the safety systems
- the cleaning of areas and components that cannot be accessed by the user.

ACTIONS REQUIRED FOR EACH ELEMENT

For each element, the actions to carried out are the following:

Element	Replace	Clean	Check
Electro valves	x	-	-
Vacuum pump internal parts	x	-	-
Sterilization chamber and external surfaces	-	x	-
Chamber filter	-	x	-
Internal parts, with particular care for the condenser fins and the main board	-	x	-
Pneumatic connections	-	-	x
Electrical connections	-	-	x
Temperature and pressure calibration	-	-	x
Door locking system	-	-	x
Pressure safety valve	-	-	x
Safety systems	-	-	x

Extraordinary maintenance

DRAINING THE USED AND CLEAN WATER TANK

If you left accidentally the tanks full for more than seven days or if you plan not to use the sterilizer for at least seven days, you have to drain the tanks.

1. Open the sterilizer service door.
2. Put a container below the sterilizer (5 l (1.3 gal) minimum) and place the end of the drain tube in it.
3. To drain the used water, insert the drain tube connector in the grey connection.
4. To drain the clean water, insert the drain tube connector in the blue connection.
5. When the water has been completely drained, press the release button to remove the drain tube and close the service door.

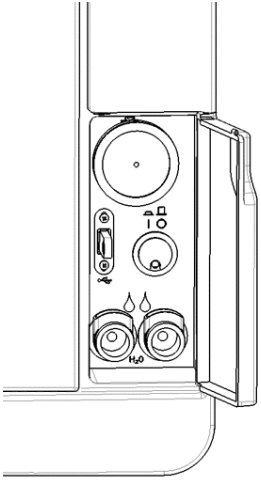

Disposal

DISPOSAL RESPONSIBILITY

- Separate the various components according to the materials they are made of
- Drop the sterilizer with a company that specializes in the recycling of related products
- Do not abandon the sterilizer in unsecured places
- Always refer to current/applicable laws and rules in the country of use

The same instructions apply to disposal of all used consumable parts.

MATERIALS

The sterilizer is mainly built from fiber-reinforced polymers, metals and electric / electronic components.

Diagnostics

CONTENTS

This section deals with the following subjects:

Errors 88
Troubleshooting 93
Emergency door opening 101

Errors

CHECKS AND ACTIONS

Notice: for any error not listed in this table, contact technical service.

Note: the errors listed in this table do not involve any potential risk for the user.

Code	Category	Description	Actions
0xx	Power supply	Load cannot be considered sterile. See "End of a sterilization cycle" on page 58.	Repeat the cycle. If the problem persists, contact technical service.
		Check if the mains switch or network circuit breaker is OFF.	
		Check if the mains cable is properly connected.	
		Switch the sterilizer OFF and ON.	
		Set date and time, then switch the sterilizer OFF and ON.	
		Check the dust filter and ensure that the sterilizer fan is not blocked.	
10x	Pressure	See error "13x to 16x" on the next page.	Repeat the cycle. If the problem persists, contact technical service.

Code	Category	Description	Actions
12x	Pressure	Wait before opening the chamber door. Allow the sterilization chamber to cool down. See error "13x to 16x" below.	Repeat the cycle. If the problem persists, contact technical service.
13x to 16x	Sterilization process	Switch the sterilizer OFF and ON.	Repeat the cycle. If the problem persists, contact technical service.
		Clean the door gasket and the chamber face side.	
		Check if the load placed in the sterilization chamber complies with the MAXIMUM WEIGHT LIMITS.	
		Clean the chamber and the chamber furniture from residuals of detergents, disinfectants and other chemicals. Replace the clean water if it is suspected to be contaminated with chemicals. Ensure all the load is clean rinsed and free from any chemicals before sterilizing.	
		Start a Vacuum Test to check the tightness of the pneumatic circuit.	
18x	Filter/s	Chamber filter clogged. Remove and clean the chamber filter. See error "13x to 16x" above.	Repeat the cycle. If the problem persists, contact technical service.
		Bacteriological filter clogged. Check and replace if necessary.	
2xx	Steam generator and heating element/s	Switch the sterilizer OFF.	Repeat the cycle. If the problem persists, contact technical service.
		Wait for the chamber to cool down. Reset the safety thermostat (see "Extraordinary maintenance" on page 86).	
3xx	Vacuum	Check the door gasket. Clean or replace it if necessary.	Repeat the cycle. If the problem persists, contact technical service.
		Clean the chamber face side.	
		Clean the chamber filter.	
		Check if chamber filter is properly locked in the cap.	
		Check the load does not exceed the MAXIMUM WEIGHT LIMITS.	
4xx	Water and fan/s	Clean water error (bad quality or low water level). Drain and refill the clean water tank.	Repeat the cycle. If the problem persists, contact technical service.

Code	Category	Description	Actions
5xx	Door locking system	Check if there are hurdles on the door locking area (chamber rack, loads, objects, …).	Repeat the cycle. If the problem persists, contact technical service.
		Check the door gasket (wrong placed).	
		Check if the door can move freely without touching the trays or the load when closing.	
		Switch the sterilizer OFF and ON.	
990	Manual stop	The cycle has been aborted by the user.	Re-process the load.

MESSAGES AND ALERTS

Notice: for any message/alert not listed in this table, contact technical service.

Note: this section describes messages and alerts. Please note that the availability of them depends on the device model and some of them might not be available for this model.

Message/Alert	Description	Action
Fill clean water tank.	There is not enough water in the tank to perform a cycle.	Fill the water tank as requested.
Drain used water tank.	The used water tank is full.	Drain the water tank as requested.
Please close the door.	The door must be locked, but you didn't close it.	Close the door so it can be locked.
Non-conform water	The clean water quality is bad (conductivity between 15 and 50 µS/cm).	You may run a cycle but the water must be replaced soon, otherwise the unit will automatically lock-out to prevent damage.
Unacceptable water.	The clean water quality is very bad (conductivity more than 50 µS/cm).	Running a cycle is inhibited to prevent damage. Replace the clean water.
Door Gasket must be replaced in ... cycles. **Have you ordered the Door Gasket?**	These are pre-alerts advising that one of the consumables has to be replaced within a small number of cycles.	Tap ✔ if you have the consumable available for replacement. Tap ✘ if you do not have the consumable in stock and must order one. In this case, the pre-alert will appear again after some cycles. See "Maintenance" on page 64.
Bact. Filter must be replaced in ... cycles. **Have you ordered the Bact. filter?**		
Dust Filter must be replaced in ... cycles. **Have you ordered the Dust filter?**		

Message/Alert	Description	Action
4000 cycle maintenance must be performed in ... cycles. **Have you already booked the 4000 cycle service?**	This pre-alert advises you that the target of 4000 cycles is close and the relevant maintenance step is to be scheduled.	Contact technical service.
Door Gasket replacement is due. **Have you replaced the door gasket?**	These messages advise that one consumable must be replaced.	Replace the consumable and tap ✔ to reset the counter (See "Maintenance" on page 64). If you do not replace the consumable, tap ✖. In this case, you may still use the sterilizer but the message will appear again after some cycles. ⚠ **CAUTION!** Operating the sterilizer with expired consumables could be dangerous and could damage the sterilizer.
Bact. Filter replacement is due.. **Have you replaced the bacteriological filter?**		
Dust Filter replacement is due. **Have you replaced the dust filter?**		
Device has completed 4000 cycles. **Please call your technical support to organize service.**	This message advises you that the target of 4000 cycles has been achieved and the relevant maintenance step is to be performed.	Contact technical service for the 4000 cycle maintenance.
Possible leak detected. **Please run Vacuum Test.**	Air was detected in the chamber: a vacuum leak is suspected. The cycle was completed but a Vacuum Test is required.	Run a Vacuum Test. Call for service if an anomaly is detected.
Please check: **- Not to overload the sterilizer** **- Door gasket** **- Dust filter** **If the problem persists contact the service.**	This message advises you that the pressure inside the chamber did not drop as expected in the first 30 seconds of drying phase.	Check the door gasket and the dust filter correct positioning and make sure do not overload the sterilizer chamber. If the problem persists, contact technical service.
Have you filled the clean water tank?	There is not enough water in the tank.	Fill the water tank as requested.

Troubleshooting

MANAGING ERRORS

If during a sterilization cycle or test an error occurs, proceed as follows:

1. Wait until the end of the reset phase.

CAUTION! Do not switch off the sterilizer during the reset phase: it takes some minutes to reset the system and reach safe conditions in the sterilizer chamber.

2. When the **OPEN** button appears, tap it to unlock the door.
3. Confirm the opening of the door.

Notice: water could be present in the chamber when opening the door: prevent spilling (e.g., place a towel below the chamber door).

VIEW AND SAVE THE ERROR LOG

1. On the homepage, tap ≡ > > : all the sterilization cycles and tests are listed with number, date, time and sterilization/test program. The sterilization cycle / test interrupted because of a cycle error or problem appears in red.
2. Tap the desired cycle or test error/problem: the report opens.
3. Tap ••• .
4. Tap to save the report in the USB pen drive.

ERROR PAGE

During the sterilization cycle, the sterilizer is continuously monitored by a control system. If an anomaly is detected, the cycle is aborted automatically, and the sterilizer starts a reset phase.

The following page appears:

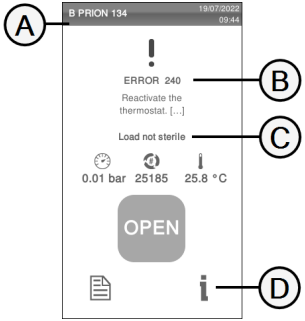

Part	Description
A	Current sterilization cycle
B	Error number, See "Errors" on page 88
C	Warning messages
D	Open button that appears after the reset phase had finished

WARNING MESSAGES

Message	Description
Load not sterile	The load is not sterile. **WARNING! Do not use items on patients!**
Drying interrupted	The load might be wet. **WARNING! Wet items are for immediate use only!**

RESET THE SAFETY THERMOSTAT

The sterilizer is fitted with a safety thermostat to prevent it from overheating. If the safety thermostat operates because of too high temperatures, the error 240 or a timeout error is displayed. The thermostat must be reset manually. Proceed as follows:

1. Switch the sterilizer OFF and remove the mains cable.
2. Wait for the sterilizer to cool down.

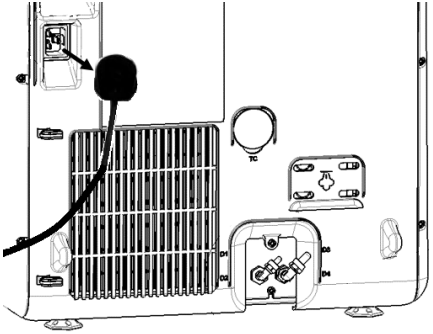

3 Open the chamber door.

4 Remove the dust filter and move the sterilizer closer to the shelf edge.

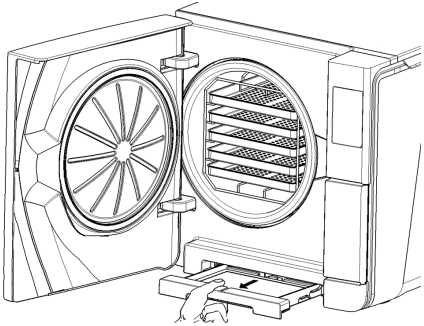

5 Push the reset button of the safety thermostat: a click sound indicates that the safety thermostat has been reset.

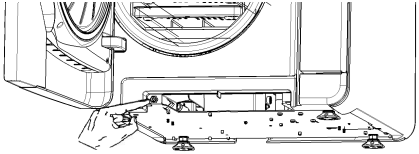

6 Insert the dust filter back into its original position.

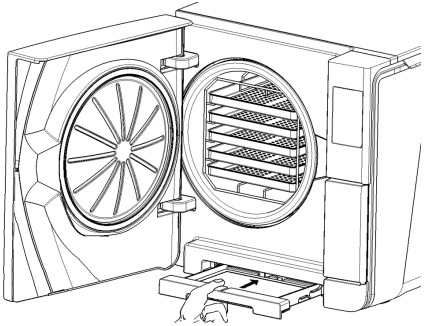

7 Close the chamber door.

8 Connect the mains cable and place the sterilizer back into its original position.

9 Switch the sterilizer ON.

10 Wait for the sterilizer to finish the error reset phase and follow the instructions on the display.

Note: if the thermostat operates repeatedly, contact technical service.

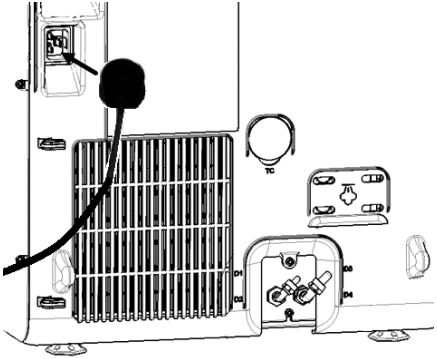

TROUBLESHOOTING TABLE

Note: if your problem is not resolved, call your authorized service provider.

Notice: before sending the sterilizer for technical service, remove the mains cable, empty both water tanks and use the original or appropriate packaging.

Problem	Possible cause	Solutions
The sterilizer remains switched OFF.	The mains switch or network circuit breaker is OFF.	Activate the mains switch or network circuit breaker (ON).
	No voltage at the socket.	Check the electric circuit.
	The power cord is not connected properly.	Check and connect the power cord properly.
Water is leaking at the front of the sterilizer.	Leaks through the chamber door gasket.	Clean or replace the door gasket. Clean the chamber face side.
	Internal leak.	Contact technical service.
The cycle commences but there is no pressure/temperature rise.	The safety thermostat switch is open.	Reset the safety thermostat switch. See "Extraordinary maintenance" on page 86.
	Electric - electronic fault.	Contact technical service.
At the end of the cycle, there is residual water in the chamber.	Sterilizer not properly leveled.	Properly level the surface the sterilizer is placed on.
	Overloaded chamber.	Comply with the maximum load weight limits for each type of load. Always use the chamber rack for trays and cassettes. See "Load maintenance and preparation" on page 53.
	Chamber filter clogged.	Remove and clean the chamber filter.
	Chamber filter cap not well-positioned.	Mount the chamber filter cap properly (see "Ordinary maintenance" on page 65).
	Load incorrectly placed.	See "Load maintenance and preparation" on page 53.

Problem	Possible cause	Solutions
Corrosion or spots on instruments.	Tap water on instruments when placed in the sterilizer.	Ensure that instruments are dry before they are placed in the sterilizer.
	Use of water of poor quality or water containing chemical substances.	Drain both water tanks. Use water of good quality. See "Water quality" on page 115.
	Organic or chemical residues on the instruments.	Clean, rinse and dry instruments before placing them in the sterilizer. See "Load maintenance and preparation" on page 53.
	Chamber, trays, chamber rack dirty.	Clean the chamber and wash the chamber furniture.
	Contact between instruments of different materials.	Ensure that instruments of different materials do not touch (aluminium, carbon or stainless steel, etc.); place them on different trays or cassettes or pouch them. See "Load maintenance and preparation" on page 53.
	Scale deposits on the chamber.	Clean the chamber and use water of good quality. See "Water quality" on page 115.
Instruments are turning brown or black.	Incorrect temperature selected.	Select a sterilization cycle featuring a lower sterilization temperature. Follow the instructions of the instrument manufacturer.
The cycle report printer does not work.	Printer not properly connected or not powered on.	Check the data and the power connection to the printer.
No cycles are stored in the cycle history menu.	An electronic board was replaced by service.	None. The memory of the old board cannot be restored. Save periodically the history on the USB pen drive.
When starting a cycle, the chamber door locks but re-opens immediately. The “Open the door” message appears.	Door gasket not properly placed; seal sticking out.	Ensure that the door gasket is evenly inserted on the entire circumference.
	Door jammed by external objects or by the load itself.	Remove any objects interfering with the chamber door. Check the door does not force against the load or the chamber furniture.

Problem	Possible cause	Solutions
When the sterilizer is connected to an automated water supply system: there is no clean water in the tank, but the automatic water filling does not fill the water.	Water fill system not connected.	Connect the water fill system to the sterilizer. See "Water quality" on page 115.
	When the water fill system attempted to fill the tank, water was temporarily unavailable.	Since water tank filling is attempted only once in-between cycle execution, this event inhibits water feeding. Switch the sterilizer OFF and then ON again. Check the external water supply system. Check for water leaks from the sterilizer.
	Faulty MIN water level sensor in the clean water tank.	Contact service.
The sterilizer enters the standby mode immediately after opening the chamber door.	The chamber door has not been opened after the previous cycle had finished and the standby mode delay has expired.	Press the standby button to exit.
At the end of the cycle the display reads “Open the door” but opening the door is impossible.	The chamber is in vacuum due to an internal malfunction.	See "Emergency door opening" on the next page. Switch the sterilizer OFF: this releases any internal pressures allowing the chamber door to be opened. Contact technical service if the problem persists.
	The bacteriological filter is blocked.	Remove the bacteriological filter to get the pressure released. Replace the filter. **Note**: the bacteriological filters need to be replaced every 400 cycles.
The sterilization process phase of a sterilization cycle was longer than expected.	The chamber temperature dropped below the minimum threshold and the software performed a successful recovery.	Wait for cycle completion. If the problem occurs frequently, contact technical service.
Warning about USB saving (HTML and SCL files).	The USB pen drive is not connected or not properly connected to the sterilizer.	Check presence and connection of the USB pen drive. If the problem persist, contact service.
Warning about programmed maintenance.	A component shall be replaced for the programmed maintenance of the sterilizer.	Contact service to order the requested component (door gasket, dust filter, bacteriological filter…). See "Ordinary maintenance" on page 65

Emergency door opening

WARNING ABOUT OPENING THE DOOR IN EMERGENCY

WARNING! High pressure. Risk of explosion, jet of hot steam, sudden opening of the door. Carry out the following procedure only if necessary and only when NO RESIDUAL PRESSURE IS IN THE CHAMBER. Any attempt to open the door while the unit is still hot or under pressure could expose the operator and the surrounding personnel to serious risk.

CAUTION! High temperature. Risk of burns. Carry out the following procedure only when the sterilizer has completely cooled down. The sterilizer should be unplugged from the mains power supply for at least 3 hours before executing this procedure.

Notice: carry out this procedure only as indicated and with the sterilizer in the indicated conditions. Any attempt to open the door in a different way can seriously damage the sterilizer.

OPENING TOOL

The door locking system is electrically activated. In case the door remains locked due to a black-out or an electric fault, an auxiliary unlocking procedure is available.

For this reason, two 9V batteries size PP3 or 1604 are required.

OPEN THE DOOR IN EMERGENCY

1. Unplug the sterilizer and wait at least three hours.

3 h

2 Take the emergency door opening tool included in the sterilizer box.

3 Open the service door.

4 Unscrew the bacteriological filter by hand (counter-clockwise).

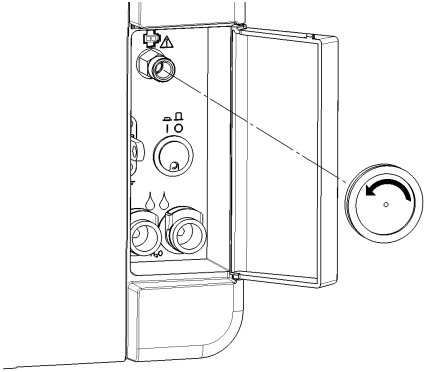

4 Plug two batteries into the connectors.

5 With the service door open, plug the plastic connector into the socket located behind the bacteriological filter.

6 As soon as the door opens, unplug the plastic connector to prevent system overload and consequent damage.

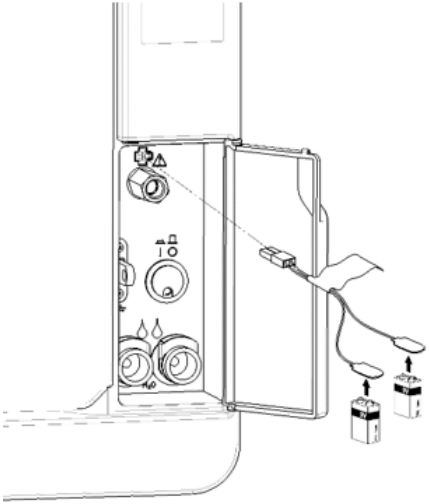

Technical data

CONTENTS

This section deals with the following subjects:

Sterilization cycles 104
Sterilization cycle phases 108
Technical data 111
Recommendations for validation 113
Diagrams 114
Water quality 115
Accessories, spare parts, consumables 116
Authorized W&H service partners 123

Sterilization cycles

WARNINGS

For your safety and for the safety of your patients:

WARNING!
Never process objects different from those specified in the cycle program table and never exceed the maximum load weight limits specified in it as this could impair the sterilization process. Such actions could result in non-sterile conditions at the end of the cycle, could expose people to the hazard of cross-infections, are considered as an improper use of the sterilizer for which the manufacturer cannot be hold responsible.
All indications of sterile load or successful completion of the cycle that are given on the display at the end of the cycle are not valid if the type and quantity of the load are not complied with.
Processing bagged items with the S Fast 134 cycle will result in wet bags/pouches at the end of the cycle, exposing the items to contamination due to improper storage. The display reminds the maximum permitted load before starting a cycle.

Note: S Fast 134 cycle has to be used according to local regulations and for immediate use only.

STANDARD STERILIZATION CYCLES AVAILABLE

There are four sterilization cycles available, all of them complying with the European Standard EN13060:

- three B-type cycles
- one S-type cycle

COMMON STERILIZATION CYCLE DATA

	Sterilization cycles			
	B Universal 134	**B Prion / Extended 134 ***	**B Universal 121****	**S Fast 134**
Sterilization temperature	134 °C	134 °C	121 °C	134 °C
Sterilization pressure	3.03 bar 2.03 bar (g)	3.03 bar 2.03 bar (g)	2.04 bar 1.04 bar (g)	3.03 bar 2.03 bar (g)
Duration of the Plateau/Sterilization phase	5'30"	20'30"	20'30"	3'30"
Duration of the drying phase (AUTO DRY and ECO DRY plus modes)	5'–22'	5'–22'	5'–28'	0'–4'
Minimum duration of the drying phase (set by the user)	22'	22'	28'	4'
Load type	All types of load [1]			All types of load [1] excluded porous
Packaging type	Wrapped and unwrapped			Unwrapped

*: cycle name might be different, depending on country requirements.

**: for all items that cannot withstand the high temperatures of the 134 cycles, such as textiles and plastics.

1: the liquids are excluded.

2: "specific load" is intended as a load up to steam penetration grade IIIa in accordance with EN ISO 17665.

TOTAL CYCLE DURATION

The total cycle time includes the drying time and may vary according to different elements, such as the following:

- type of load (solid or porous).
- load weight.
- other factors.

	Load					
	Empty		Full		Typical	
	Lara 17	Lara 22	Lara 17	Lara 22	Lara 17	Lara 22
B Universal 134	26'30"	29'30"	52'30"	56'30"	38'30"	40'30"
B Prion / Extended 134 *	42'	42'	67'	70'	54'	56'
B Universal 121**	41'	42'	73'	76'	-	-
S Fast 134	20'	20'	22'	22'	-	-

Note: values and cycle names could be different depending on country requirements.

MAXIMUM LOAD FOR INSTRUMENTS

Note: the load given includes the trays, the containers and everything is put into the chamber, with the sole exclusion of the tray rack.

	Instruments					
	Bagged		Unwrapped		Porous	
	Lara 17	Lara 22	Lara 17	Lara 22	Lara 17	Lara 22
B Universal 134	4.5 kg (10 lbs)	5.5 kg (12.1 lbs)	4.5 kg (10 lbs)	5.5 kg (12.1 lbs)	1.5 kg (3.3 lbs)	2.0 kg (4.4 lbs)
B Prion / Extended 134 *	4.5 kg (10 lbs)	5.5 kg (12.1 lbs)	4.5 kg (10 lbs)	5.5 kg (12.1 lbs)	1.5 kg (3.3 lbs)	2.0 kg (4.4 lbs)
B Universal 121**	4.5 kg (10 lbs)	5.5 kg (12.1 lbs)	4.5 kg (10 lbs)	5.5 kg (12.1 lbs)	1.5 kg (3.3 lbs)	2.0 kg (4.4 lbs)
S Fast 134	-	-	2.0 kg (4.4 lbs)	2.0 kg (4.4 lbs)	-	-

MAXIMUM LOAD FOR CONTAINERS

The correct dryness can only be obtained with the AUTO DRY and ECO DRY plus modes.

	Lara 17	Lara 22
B Universal 134	9.0 kg (19.8 lbs)	9.0 kg (19.8 lbs)
B Prion / Extended 134 *	9.0 kg (19.8 lbs)	9.0 kg (19.8 lbs)
B Universal 121**	9.0 kg (19.8 lbs)	9.0 kg (19.8 lbs)
S Fast 134	not suitable	not suitable

Sterilization cycle phases

COMMON LEGEND OF THE STERILIZATION CYCLE PHASES

Following is the description of the sterilization phases.

Code	Description
PHE	Pre-heating of the sterilizer. This phase is not considered a part of the cycle.
PV1 - PV3 **PV1 - PV6**	Vacuum pulse (removal of air from the sterilizer chamber/load).
PP1 - PP2 **PP1 - PP5**	Pressure pulse (steam generation).
PPH	Rise to the Plateau/Sterilization phase.
PR	Process (Plateau/Sterilization phase).
DRY	Vacuum drying.
SEP	Water separation.
LEV	Leveling. Pressure inside the sterilization chamber is leveled to the atmospheric pressure.
END	End of the cycle.

B-TYPE STERILIZATION CYCLE PHASES

All B-type sterilization cycles feature the same basic pressure profile as shown in the graph below. The duration and the temperature of the sterilization phase differ between the various cycles.

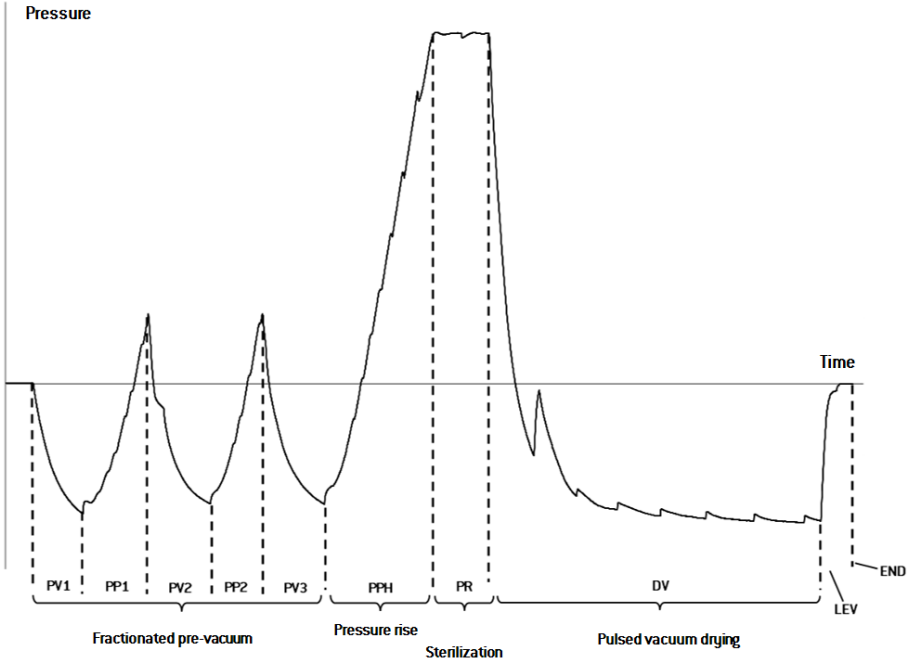

S-TYPE STERILIZATION CYCLE PHASES

The S Fast 134 cycle is specifically designed to sterilize unwrapped instruments, for immediate use on patients, not requiring a complete drying. Thus, the drying phase of this cycle is short, making this cycle the fastest available.

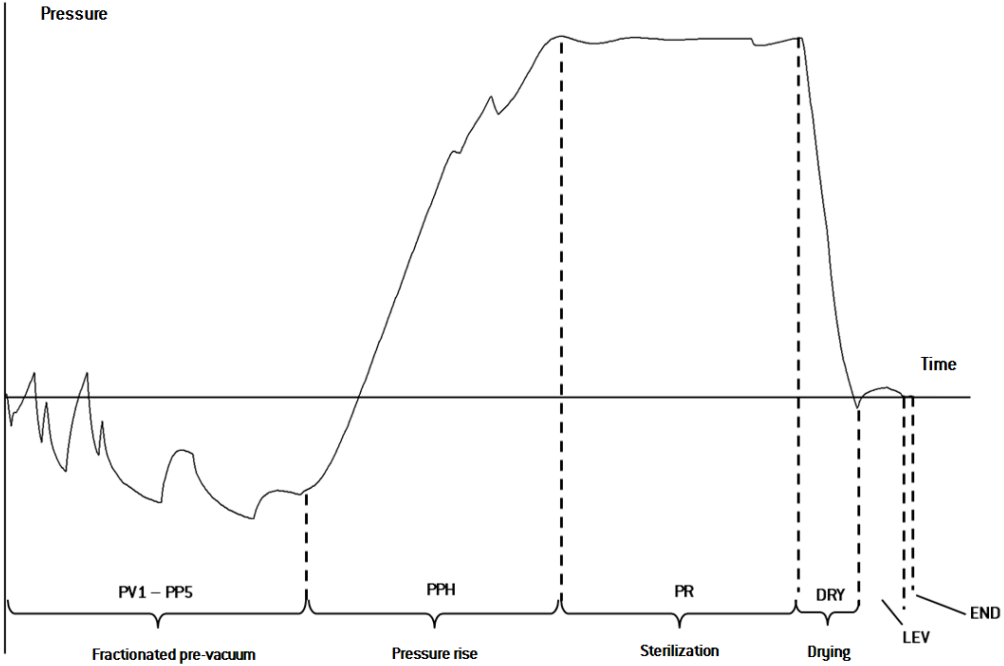

Technical data

WATER SUPPLY SYSTEM

Temperature	max. 35 °C (95 °F)
Pressure	min. 2 bar – max. 8.6 bar (min 29 psi - max. 124.7 psi)
Flow	min. 0.25 – max. 0.5 l/min (min. 0.066 - max. 0.132 gal/min 1)

POWER SUPPLY SYSTEM

Nominal voltage and Max. current	200–240 V ac (±10%), 50/60 Hz, 10 A, single-phase (refer to product label)
Overvoltage category	II
Protection required	Suitable circuit breaker and a Ground Fault Circuit Interrupter (GFCI). All protection devices must be certified according to applicable standard. A grounded connection is essential.
Communication with other devices	1 USB port at the front 1 USB port at the rear
Features	Fully micro-processor controlled, process evaluation system according to EN13060. Programmable standby mode.
Max. heat output	3000 kJ/h
Sound pressure level (LpA)	<80 dB(A)

INSTALLATION REQUIREMENTS

Working temperature	From +5 °C to +40 °C (from +41 °F to +104 °F)
Working relative humidity	Max. RH 80% up to 31 °C (88 °F), linearly decreasing to 50% at 40 °C (104 °F)
Storage temperature / rel. humidity	From -20 °C to +60 °C (from -4 °F to +140 °F) / 0–90 % (with empty tanks)
Max altitude	3000 m asl (9843 ft)
Min. atmospheric pressure	0.6 bar (8.7 psi)
Overall dimensions	W: 47 cm/H: 45 cm/D: 65 cm (W: 18.30"/H: 17.79"/D: 25.43")
Min. space required (feet in forward position)	W: 49 cm/H: 50 cm/D: 54 cm (W: 19.09"/H: 19.76"/D: 21.14")
Min. space required (feet in rearward position)	W: 49 cm/H: 50 cm/D: 44 cm (W: 19.09"/H: 19.76"/D: 17.28")
Size of the door movement	W: 53 cm/H: 45 cm/D: 36 cm (W: 20.94"/H: 17.8"/D: 14.05")
Weight empty	Lara 17: 42.5 kg (93.7 lbs) Lara 22: 44 kg (97 lbs)
Max. weight (fully loaded)	Lara 17: 53.1 kg (117 lbs) Lara 22: 56.1 kg (123.8 lbs)
Weight per support area	Lara 17: 36 kN/m² Lara 22: 37.65 kN/m²
Environment pollution	Degree 2
Usage environment	Indoor

STERILIZER CHAMBER

Pressure safety valve	2.6 bar (37.7 psi)
Safety thermostats	180 °C (356 °F)
Total volume	Lara 17 - 17 l/Ø: 250 mm/D: 362 mm (4.5 gal [1], Ø: 9.8”/D: 14”) Lara 22 - 22 l/Ø: 250 mm/D: 440 mm (5.8 gal [1], Ø: 9.8”/D: 17”)
Usable space *	Lara 17 - W: 190 mm/H: 190 mm/D: 310 mm (W: 7.5”/H: 7.5”/D: 12.2”) Lara 22 - W: 190 mm/H: 190 mm/D: 390 mm (W: 7.5”/H: 7.5”/D: 15.36”)
Bacteriological filter	0.3 µm

STEAM GENERATOR

Pressure safety valve	5 bar (72.51 psi)
Safety thermostats	230 °C (446 °F)

DISTILLED OR DEMINERALIZED WATER

Water quality	Fulfilling EN 13060 Ann. C (conductivity: < 15 µS/cm, Total Dissolved Solids: < 10 ppm)
Average water consumption	0.13 to 0.59 litres/cycle (0.03 to 0.16 gal/cycle [1])
Tank volume	Clean water 4.8 l (1.27 gal [1]), 2.8 l (0.74 gal [1]) with air gap Used water 4.8 l (1.27 gal [1])

*****: usable space with standard rack and trays. With optional racks and trays, see "Accessories, spare parts, consumables" on page 116.

1: the unit of measurement used is U.S. liquid gallons.

Recommendations for validation

TEST VALIDATION POINTS

Lara sterilizers can be validated in accordance to EN ISO 17665.

For further details please refer to the Qualification/Validation guide for sterilization cycles of the manufacturer.

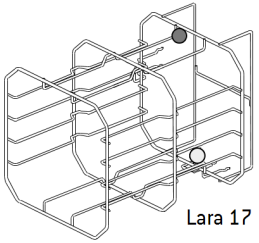

Part	Description
●	Hottest points
○	Coldest points

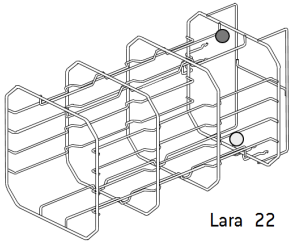

Diagrams

CONNECTION DIAGRAMS

Data communication

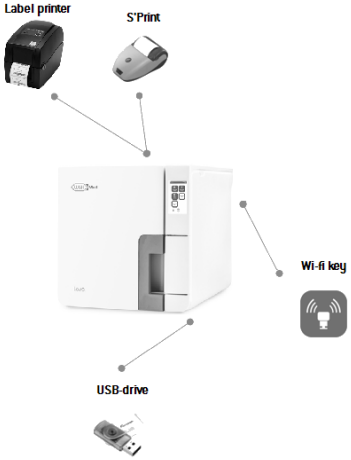

Water system

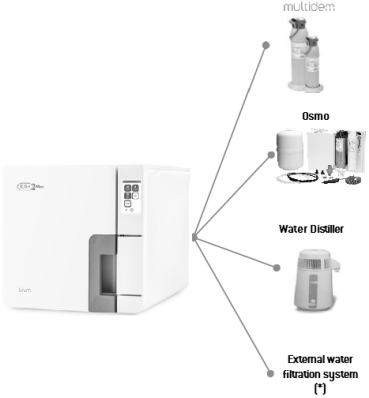

(*): the water filtration system must be fitted with a backflow prevention device complying to IEC 61770 and to national and local regulations.

For water requirements see "Technical data" on page 111.

Water quality

FEED WATER SPECIFICATIONS (EN 13060)

Notice: do not use rust inhibitor or any other agents in the clean water tank.

This sterilizer uses distilled or demineralized water to generate steam for the sterilization process. The table below lists the maximum content of minerals and the specifications for the water used for steam sterilization according to EN13060.

Contaminants/minerals/qualities	Value/Specification
Total Dissolved Solids	< 10 mg/l
Silicon oxide, SiO2	< 1 mg/l
Iron	< 0.2 mg/l
Cadmium	< 0.005 mg/l
Lead	< 0.05 mg/l
Heavy metals (excl. iron, cadmium, lead)	< 0.1 mg/l
Chloride	< 2 mg/l
Phosphate	< 0.5 mg/l
Conductivity (at 20°C)	< 15 µS/cm
pH value	5-7
Appearance	colorless, clean, free from sediment

Contaminants/minerals/qualities	Value/Specification
Hardness	< 0.02 mmol/l
Chemical additives	**No chemicals or additives must be added to the water used for the steam sterilization process**, even if they are specifically claimed for use in steam generators, or for steam production, or as additives for sterilization, disinfection, cleaning or corrosion protection.

Notice:

The use of water with a conductivity greater than 15 µS/cm (10 ppm) may affect the sterilization process and damage the sterilizer.

The use of water with a conductivity greater than 50 µS/cm, or not complying with the specifications in the table above, may strongly affect the sterilization process and seriously damage the sterilizer.

The manufacturer's warranty is void if the sterilizer was used with water containing contaminant or chemical levels exceeding those listed in the table above.

Accessories, spare parts, consumables

Note: use only accessories, spare parts and consumables recommended by W&H.

Note: before purchasing, check that the accessories fulfill all applicable standards in the country of use.

LIST OF ACCESSORIES AND SPARE PARTS

Picture	Part		Part number
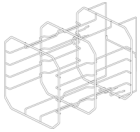	**Standard chamber rack for 5 aluminium trays for Lara 17** Usable space - Tray size (mm): ■ 190 x 21 x 312 ■ 190 x 28 x 312 ■ 190 x 28 x 312 ■ 190 x 28 x 312 ■ 190 x 21 x 312		F523031X
	Note: rack rotated 90°. **Standard chamber rack for 3 cassettes / containers* for Lara 17** Usable space - Cassette size (mm): ■ 190 x 43 x 312 ■ 190 x 50 x 312 ■ 190 x 43 x 312		
	Standard chamber rack for 1 cassette / container for Lara 17 Usable space - Cassette size (mm): ■ 160 x 160 x 312		

Picture	Part		Part number
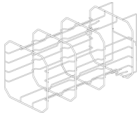	**Standard chamber rack for 5 aluminium trays for Lara 22** Usable space - Tray size (mm): ■ 190 x 21 x 387 ■ 190 x 28 x 387 ■ 190 x 28 x 387 ■ 190 x 28 x 387 ■ 190 x 21 x 387		F523032X
	Note: rack rotated 90°. **Standard chamber rack for 3 cassettes / containers* for Lara 22** Usable space - Cassette size (mm): ■ 190 x 43 x 387 ■ 190 x 50 x 387 ■ 190 x 43 x 387		
	Standard chamber rack for 1 cassette / container for Lara 22 Usable space - Cassette size (mm): ■ 160 x 160 x 387		

Picture	Part		Part number
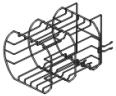	**Optional chamber rack for 4 cassettes / containers for Lara 17** Usable space - Cassette size (mm): ■ 190 x 36 x 300 ■ 210 x 36 x 300 ■ 210 x 36 x 300 ■ 190 x 36 x 300		F523012X
	Optional chamber rack for 1 cassette / container for Lara 17 Usable space - Cassette size (mm): ■ 140 x 160 x 300		
	Optional chamber rack for 4 cassettes / containers for Lara 22 Usable space - Cassette size (mm): ■ 190 x 36 x 385 ■ 210 x 36 x 385 ■ 210 x 36 x 385 ■ 190 x 36 x 385		F523015X
	Optional chamber rack for 1 cassette / container for Lara 22 Usable space - Cassette size (mm): ■ 140 x 160 x 385		

Picture	Part		Part number
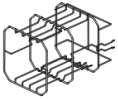	**Optional chamber rack for 2 cassettes / containers for Lara 17** Usable space - Cassette size (mm): ■ 190 x 78 x 300 ■ 210 x 78 x 300		F523016X
	Optional chamber rack for 1 cassette / container for Lara 17 Usable space - Cassette size (mm): ■ 160 x 160 x 300		
	Optional chamber rack for 2 cassettes / containers for Lara 22 Usable space - Cassette size (mm): ■ 190 x 78 x 385 ■ 210 x 78 x 385		F523017X
	Optional chamber rack for 1 cassette / container for Lara 22 Usable space - Cassette size (mm): ■ 160 x 160 x 385		

Picture	Part		Part number
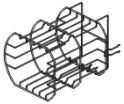	**Optional chamber rack for 3 cassettes / containers for Lara 17** Usable space - Tray size (mm): ■ 205 x 36 x 300 ■ 210 x 36 x 300 ■ 205 x 36 x 300		F523020X
	Optional chamber rack for 1 cassette / container for Lara 17 Usable space - Tray size (mm): ■ 140 x 160 x 300		
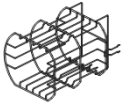	**Optional chamber rack for 3 cassettes / containers for Lara 22** Usable space - Cassette size (mm): ■ 205 x 36 x 385 ■ 210 x 36 x 385 ■ 205 x 36 x 385		F523021X
	Optional chamber rack for 1 cassette / container for Lara 22 Usable space - Cassette size (mm): ■ 140 x 160 x 385		

Picture	Part		Part number
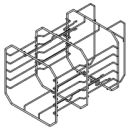	**Optional chamber rack for 6 aluminium trays for Lara 17** Usable space - Tray size (mm): ■ 190 x 15 x 312 ■ 190 x 22 x 312 ■ 190 x 22 x 312 ■ 190 x 22 x 312 ■ 190 x 22 x 312 ■ 190 x 18 x 312		F523033X
	Note: rack rotated 90°. **Optional chamber rack for 3 cassettes / containers for Lara 17** Usable space - Cassette size (mm): ■ 190 x 43 x 312 ■ 190 x 50 x 312 ■ 190 x 43 x 312		
	Optional chamber rack for 1 cassette / container for Lara 17 Usable space - Cassette size (mm): ■ 160 x 160 x 312		

Picture	Part		Part number
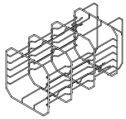	**Optional chamber rack for 6 aluminium trays for Lara 22** Usable space - Tray size (mm): ■ 190 x 15 x 387 ■ 190 x 22 x 387 ■ 190 x 22 x 387 ■ 190 x 22 x 387 ■ 190 x 22 x 387 ■ 190 x 18 x 387		F523034X
	Note: rack rotated 90°. **Optional chamber rack for 3 cassettes / containers* for Lara 22** Usable space - Cassette size (mm): ■ 190 x 43 x 387 ■ 190 x 50 x 387 ■ 190 x 43 x 387		
	Standard chamber rack for 1 cassette / container for Lara 22 Usable space - Cassette size (mm): ■ 160 x 160 x 387		

Picture	Part		Part number
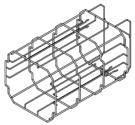	**Optional chamber rack for 2 aluminium trays and 3 wider aluminium trays for Lara 22** Usable space - Tray size (mm): ■ 190 x 21 x 387 ■ 215 x 22 x 387 ■ 215 x 28 x 387 ■ 215 x 28 x 387 ■ 190 x 22 x 387		F523035X
	Note: rack rotated 90°. **Optional chamber rack for 3 cassettes / containers* for Lara 22** Usable space - Cassette size (mm): ■ 190 x 43 x 387 ■ 190 x 50 x 387 ■ 190 x 43 x 387		
	Standard chamber rack for 1 cassette / container for Lara 22 Usable space - Cassette size (mm): ■ 160 x 160 x 387		

Picture	Part		Part number
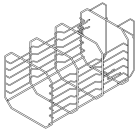	**Optional chamber rack for 6 aluminium trays for Lara 22** Usable space - Tray size (mm): ■ 190 x 15 x 387 ■ 190 x 22 x 387 ■ 190 x 22 x 387 ■ 190 x 22 x 387 ■ 190 x 22 x 387 ■ 190 x 18 x 387		F523041X
	Note: rack rotated 90°. **Optional chamber rack for 1 cassette / container* for Lara 22** Usable space - Cassette size (mm): ■ 190 x 150 x 387		
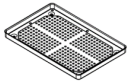	**Standard aluminium tray for Lara 17** (186 x 19.5 x 287 mm)		F523204X
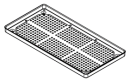	**Standard aluminium tray for Lara 22** (186 x 19.5 x 379 mm)		F523205X
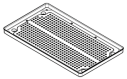	**Large aluminium tray for Lara 22** (215 x 19.5 x 379 mm) Suitable for F523035X		F523211X
	Tray holder		F523001X

Picture	Part	Part number
	Drain tube kit with fittings	A812110X
	Drain tube	S230900X
	Permanent drain tube (3 m)	W230009X
	Mains cable	U38012XX
	Safety bracket kit	X051125X
	USB pen drive	V000004X
	Report printer	19721141
	USB-serial converter	A801503X

Picture	Part	Part number
	Label printer (label printer only)	19721109
	Label printer USB connection kit ■ USB connection cable ■ 1 roll of 2100 labels ■ 1 wax/resin ribbon ■ activation code instructions	19721123
	Label printer consumable kit ■ 2 rolls of 2100 labels ■ 2 wax/resin ribbons	A810500X
	QR code / Bar code reader for labels	19721132
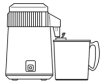	**Water Distiller**	19723101
	Multidem C27 water demineralizer	19723112
	Osmo water demineralizer (24 V)	19721143
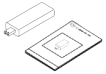	**Wi-Fi dongle key**	19721136

Picture	Part	Part number
	Lifting strap	F602001X
	Emergency door opening tool	F372106X
	Kit Helix Test (PCD + 25 strips)	T800206X
	Kit Helix Test (PCD + 250 strips)	T800207X
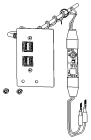	**USB socket hub assembly**	X051518X

*****: the rack, rotated 90°, accepts 5 standard aluminium trays.

CONSUMABLES

Picture	Part	Part number	When replace it
	Bacteriological filter (bagged)	W322400X	Every 400 cycles
	Door gasket	F460504X	Every 800 cycles
	Dust filter	F364511X	Every 400 cycles
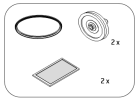	**400/800 cycle consumable kit** Components: ■ 1 door gasket ■ 2 bacteriological filters ■ 2 dust filters	X050328X	Refer to each single component above

ACTIVATION CODES

Activation code	Description	Part number
Performance	Activates the **ECO DRY plus** drying mode	19730070
Traceability	Activates the **User Management** and **Options** menus	19730072

Activation code	Description	Part number
Warranty Extension	Extends the device warranty by 1 year. **Note**: up to 3 Activation Codes of this type can be used on one device (for a total of 3 years extension); the code/s must be activated within the first year after the purchase of the device. **Note**: to acquire the activation code please refer to the Activation code instructions.	19730083

Authorized W&H service partners

A list and a map with your nearest W&H service partner are available at med.wh.com.

Documentation forms

CONTENTS

This section deals with the following subjects:

W&H installation report 124
Helix Test documentation form 127

W&H installation report

QUESTIONS

N.	Question	Answer	
	Responsibility		
1	Was the head of the clinic/practice present during all the in-service?	Yes	No
	Packaging and content		
2	Is the packaging of the sterilizer undamaged?	Yes	No
3	When unpacked, is the sterilizer undamaged?	Yes	No
4	Are all the contents of the package available (sterilizer ship-with)?	Yes	No
5	Are all the ordered accessories available with the sterilizer?	Yes	No
6	Have you removed all the protection covers from the sterilizer and from all the ship-with?	Yes	No

N.	Question	Answer	
	Completeness of the Instructions for Use		
7	Were all sections of the Instructions for Use of the sterilizer covered and explained during the in-service?	Yes	No
	Workplace suitability		
8	Is the allocated countertop for the sterilizer levelled and flat?	Yes	No
9	Are the recommended ventilation indications of the allocated area for the sterilizer respected?	Yes	No
10	Are the required minimum clearances respected?	Yes	No
11	Have you explained which water quality is required for the use of the sterilizer? Check and measure the µS/cm of the water.	Yes	No
	Involvement of the Head/personnel of the clinic/pratice		
12	Have you shown to the Head/personnel of the clinic/practice the procedure for filling and draining the main and used water tanks?	Yes	No
13	Have you shown to the Head/personnel of the clinic/practice how to program the sterilizer?	Yes	No
14	Have you shown to the Head/personnel of the clinic/practice the cycle options?	Yes	No
15	Have you shown to the Head/personnel of the clinic/practice what the messages and alarms mean?	Yes	No

N.	Question	Answer	
16	Have you shown to the Head/personnel of the clinic/practice how to manually abort a cycle?	Yes	No
17	Have you shown to the Head/personnel of the clinic/practice the maintenance program and procedures?	Yes	No
18	Have you shown to the Head/personnel of the clinic/practice how to use all of the accessories?	Yes	No
19	Have you shown to the Head/personnel of the clinic/practice the advantages of having a USB connection for a pen drive?	Yes	No
20	Have you shown to the Head/personnel of the clinic/practice the advantages of having a LAN connection?	Yes	No
21	Have you suggested to the Head/personnel of the clinic/practice to periodically backup the data, stored on the USB pen drive and/or in a PC, on another safe support?	Yes	No
22	Have you shown to the Head/personnel of the clinic/practice the advantages of having a Wi-Fi connection (remote data saving)?	Yes	No
23	Have you explained to the Head/personnel of the clinic/practice the correct load type for each available sterilization program?	Yes	No
24	Have you shown to the Head/personnel of the clinic/practice how to prepare and place the load in the sterilizer chamber?	Yes	No
25	Have you explained to the Head/personnel of the clinic/practice to use only original parts and accessories on the sterilizer?	Yes	No
26	Have you shown and explained to the Head/personnel of the clinic/practice the safety advise section?	Yes	No

N.	Question	Answer	
27	Have you explained to the Head/personnel of the clinic/practice the cybersecurity information?	Yes	No
28	Have you explained to the Head/personnel of the clinic/practice how to perform the B&D Test?	Yes	No
29	Have you explained to the Head/personnel of the clinic/practice how to perform the Helix Test?	Yes	No
Check			
30	Have you executed a Vacuum Test?	Yes	No
31	Have you executed a B Universal 134 cycle program with the tray rack and trays inserted?	Yes	No
32	Are all connections to the sterilizer well positioned and plugged (accessories, etc…)?	Yes	No

INSTALLATION INFORMATION

RIL-1 Serial Number:	
Date:	
Purchased from:	
Installed by:	
Dr./Clinic name:	
Address:	
Phone:	
Receiver's signature:	
Installer's signature:	

INSTALLATION REPORT RECORDING

The report must be provided to the dealer from the manufacturer.

It's the dealer's responsibility to complete and archive the report for each single installation, according to their internal procedures.

The archived report must be available on demand should the manufacturer request it.

Helix Test documentation form

INSTRUCTIONS

Use this page to create a logbook tracing the effectiveness of the sterilization cycle during the whole lifespan of your sterilizer.

FORM

Date	Cycle n.	Operator	Released		Signature	Chemical indicator
			Yes	No		
			Yes	No		
			Yes	No		
			Yes	No		
			Yes	No		
			Yes	No		
			Yes	No		

Date	Cycle n.	Operator	Released		Signature	Chemical indicator
			Yes	No		
			Yes	No		
			Yes	No		
			Yes	No		
			Yes	No		
			Yes	No		
			Yes	No		
			Yes	No		
			Yes	No		
			Yes	No		
			Yes	No		

Date	Cycle n.	Operator	Released		Signature	Chemical indicator
			Yes	No		
			Yes	No		
			Yes	No		
			Yes	No		
			Yes	No		
			Yes	No		
			Yes	No		
			Yes	No		

W&H Sterilization Srl
via Bolgara, 2
Brusaporto (BG)
Italy
med.wh.com
+39 035 66 63 000

RIL-1 W&H Med
Instructions for Use
ENG
Rev08
12/06/2026
Subject to changes